Data Sheet | Item Number: 750-455/040-000

4-channel analog input; 4 … 20 mA; Single-ended; Extreme

https://www.wago.com/750-455/040-000

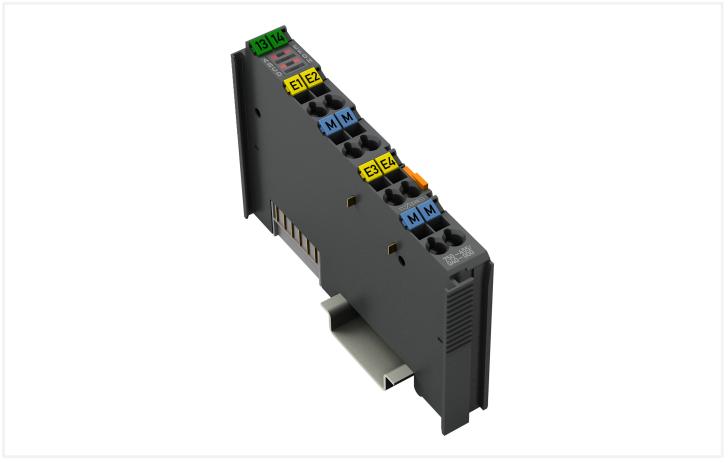

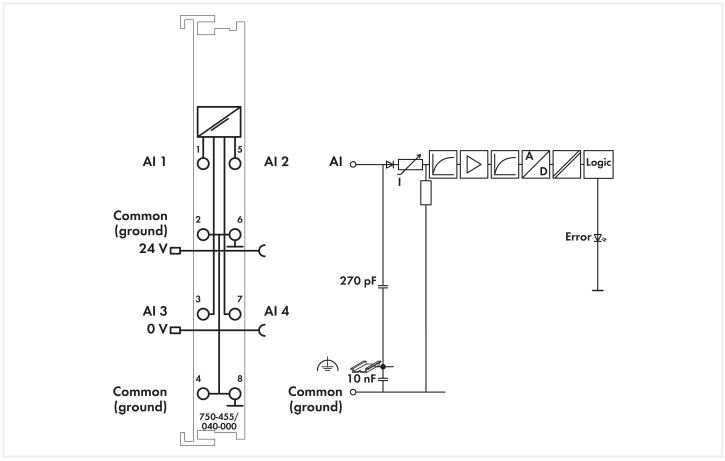

Color: ■ dark gray

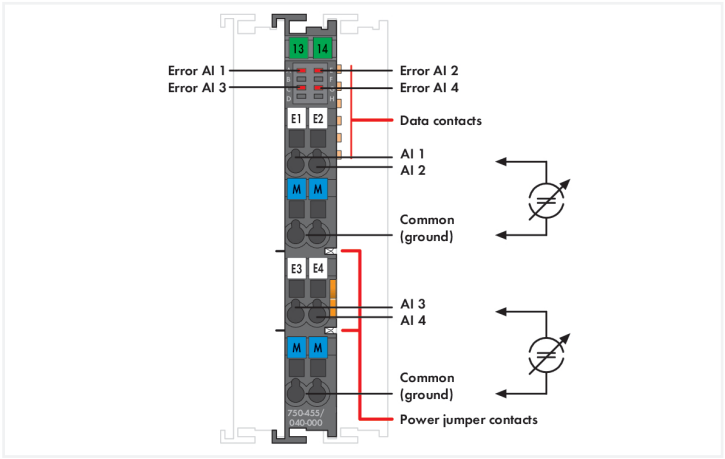

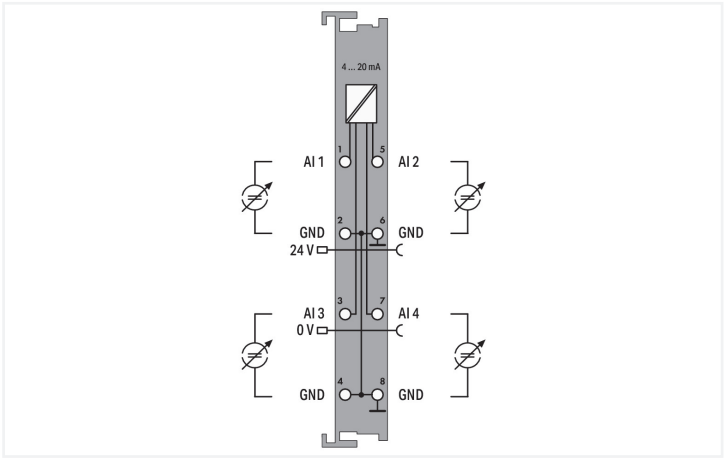

This analog input module processes standard 4–20 mA signals.
The input signal is electrically isolated and is transmitted with a resolution of 12 bits.
The internal system supply powers the module.
The input channels of the module have a common ground potential.

The device is ideal for operation in extreme environments thanks to:

- An extended temperature range
- Greater immunity to impulse voltages and electromagnetic interference
- Higher vibration and shock resistance

Technical data	
Number of analog inputs	4
Total number of channels (module)	4
Signal type	Current
Signal type (current)	4 … 20 mADC
Sensor connection	4 x (2-wire)
Input voltage (max.)	32 V
Signal characteristics	Single-ended
Resolution [bit]	12 bits
Input resistance (max.)	100 Ω
Data width	4 x 16-bit data; 4 x 8-bit control/status (optional)

Technical data

Conversion time (typ.)	10 ms
Measurement error (reference temperature)	25 °C
Measurement error, deviation (max.) from the upper-range value	0.1 %
Temperature error (max.) of the upper-range value	0.01 %/K
Supply voltage (system)	5 VDC; via data contacts
Current consumption (system supply)	65 mA
Supply voltage (field)	24 VDC (-25 … +30 %); via power jumper contacts (power supply via blade contact; transmission via spring contact); Derating must be observed!
Dielectric strength	510 VAC / 775 VDC; per EN 60870-2-1
Rated impulse withstand voltage	1 kV
Indicators	LED (A, E, C, G) red: Error AI 1 … AI 4
Number of incoming power jumper contacts	2
Number of outgoing power jumper contacts	2
Current carrying capacity (power jumper contacts)	10 A
Derating	Derating (supply voltage): Ambient temperatures under laboratory conditions: (-25 … +30 %); for -40 … +55 °C: 24 V (-25 … +20 %); for +55 … +70 °C: 24 V (-25 … +10 %); Lower limit in all temperature ranges: -27.5 % (including 15 % residual ripple)

Connection Data

Connection technology: I/O	8 x CAGE CLAMP®
Connectable conductor materials	Copper
Connection type	Inputs/outputs
Solid conductor	0.25 … 2.5 mm² / 24 … 14 AWG
Fine-stranded conductor	0.25 … 2.5 mm² / 24 … 14 AWG
Strip length	8 … 9 mm / 0.31 … 0.35 inches

Physical data

Width	12 mm / 0.472 inches
Height	100 mm / 3.937 inches
Depth	67.8 mm / 2.669 inches
Depth from upper-edge of DIN-rail	60.6 mm / 2.386 inches

Mechanical data

Mounting type	DIN-35 rail

Material data

Color	dark gray
Housing material	Polycarbonate; polyamide 6.6
Fire load	0.698 MJ
Weight	51.3 g
Conformity marking	CE

Continued on next page

Environmental requirements

Ambient temperature (operation)	-40 … +70 °C
Ambient temperature (installation)	-20 … +70 °C
Ambient temperature (storage)	-40 … +85 °C
Protection type	IP20
Pollution degree	2 per IEC 61131-2
Operating altitude	without temperature derating: 0 … 2000 m; with temperature derating: 2000 … 5000 m (0.5 K/100 m); 5000 m (max.)
Mounting position	Horizontal left, horizontal up, vertical top and vertical bottom
Relative humidity (without condensation)	95 %
Relative humidity (with condensation)	Short-term condensation per Class 3K7/IEC EN 60721-3-3 and E-DIN 40046-721-3 (except for wind-driven precipitation, water and ice formation)
Vibration resistance	According to type test for marine classification (ABS, BV, DNV, IACS, LR): acceleration: 5g, IEC 60068-2-6, EN 60870-2-2, IEC 60721-3-1, -3, EN 50155, EN 61373
Shock resistance	per IEC 60068-2-27 (10g/16 ms/half-sine/1,000 shocks; 25g/6 ms/half-sine/1,000 shocks), EN 50155, EN 61373
Corrosion Resistance	Conformal Coating: yes EN/IEC 60068-2-60: Method 4 ISA S71.04: G3 Group A
EMC immunity to interference	per EN 61000-6-1, -2; EN 61131-2; marine applications; EN 50121-3-2; EN 50121-4, -5; EN 60255-26; EN 60870-2-1; EN 61850-3; IEC 61000-6-5; IEEE 1613; VDEW: 1994
EMC emission of interference	per EN 61000-6-3, -4, EN 61131-2, EN 60255-26, marine applications, EN 60870-2-1, EN 61850-3, EN 50121-3-2, EN 50121-4, -5
Exposure to pollutants	per IEC 60068-2-42 and IEC 60068-2-43
Permissible H_2S contaminant concentration at a relative humidity 75 %	10 ppm
Permissible SO_2 contaminant concentration at a relative humidity 75 %	25 ppm

Commercial data

Product Group	15 (I/O System)
PU (SPU)	1 pcs
Packaging type	Box
Country of origin	DE
GTIN	4050821460299
Customs tariff number	85437090990

Product Classification

UNSPSC	32101505
eCl@ss 10.0	27-24-26-01
eCl@ss 9.0	27-24-26-01
ETIM 9.0	EC001596
ETIM 10.0	EC001596
ECCN	NO US CLASSIFICATION

Environmental Product Compliance

CAS-No.	1303-86-2 1317-36-8 7439-92-1
REACH Candidate List Substance	Diboron trioxide Lead Lead monoxide
RoHS Compliance Status	Compliant,With Exemption
RoHS Exemption	6(c) 7(a) 7(c)-I 7(c)-II
SCIP notification number (Bulgaria)	e13503bf-cdf1-4762-a6d4-f15bfe0865a9
SCIP notification number (Czech Republic)	d840f2cd-282a-42c5-9246-725f7fc073ce

Continued on next page

Approvals / Certificates

General approvals

Approval	Standard	Certificate Name
EAC GZO Almaty Standart	TP TC 020/2011	EAC CoC 03083
KC National Radio Research Agency	Article 58-2, Clause 3	MSIP-REM-W43-AIM750
UL Underwriters Laboratories Inc. (ORDINARY LOCATIONS)	UL 508	E175199

Declarations of conformity and manufacturer's declarations

Approval	Standard	Certificate Name
EU-Declaration of Conformity WAGO GmbH & Co. KG	-	-
UK-Declaration of Conformity WAGO GmbH & Co. KG	-	-

Approvals for marine applications

Approval	Standard	Certificate Name
ABS American Bureau of Shipping	-	22-2208829-PDA
LR Lloyds Register	-	LR22276776TA
PRS Polski Rejestr Statków	-	TE/1099/880590/23

Approvals for hazardous areas

Approval	Standard	Certificate Name
ATEX TUEV Nord Cert GmbH	EN 60079-0	TUEV 17 ATEX 193969X (II 3 G Ex ec IIC T4 Gc)
CCC CNEX	CNCA-C23-01	2020312310000214 (Ex ec IIC T4 Gc)
IECEx TUEV Nord Cert GmbH	IEC 60079-0	IECEx TUN 16.0046X (Ex ec IIC T4 Gc)
UKEx WAGO GmbH & Co. KG	EN 60079-0	UKCA_WAGO22UKEX005X_ec
UL Underwriters Laboratories Inc. (HAZARDOUS LOCATIONS)	UL 121201	E198726

Downloads

Environmental Product Compliance

Compliance Search

Environmental Product Compliance 750-455/040-000

Documentation

Manual

Product Manual 4AI 4-20 mA S.E. /XTR	2450013707 | 5 | en-US | 2025-11-12 10:37 21.11.2025	pdf 583.11 KB	

System Description

Overview on WAGO-I/O-SYSTEM 750 approvals	pdf 770.48 KB	
750 XTR Series I/O-System – General Product Information	pdf 726.09 KB	

Continued on next page

Bid Text			
750-455/040-000	19.02.2019	xml 6.51 KB	⬇
750-455/040-000	28.10.2015	doc 28.50 KB	⬇

Instruction Leaflet			
CCC Ex (Additional information)	26.04.2023	pdf 144.58 KB	⬇

CAD/CAE-Data

CAD data	
2D/3D Models 750-455/040-000	⬇

CAE data	
EPLAN Data Portal 750-455/040-000	⬇
WSCAD Universe 750-455/040-000	⬇
ZUKEN Portal 750-455/040-000	⬇

1 Compatible Products

1.1 Optional Accessories

1.1.1 DIN-rail

1.1.1.1 Mounting accessories



Item No.: 210-196
Aluminum carrier rail; 35 x 8.2 mm; 1.6 mm thick; 2 m long; unslotted; similar to EN 60715; silver-colored



Item No.: 210-198
Copper carrier rail; 35 x 15 mm; 2.3 mm thick; 2 m long; unslotted; according to EN 60715; copper-colored



Item No.: 210-197
Steel carrier rail; 35 x 15 mm; 1.5 mm thick; 2 m long; slotted; similar to EN 60715; silver-colored



Item No.: 210-114
Steel carrier rail; 35 x 15 mm; 1.5 mm thick; 2 m long; unslotted; similar to EN 60715; silver-colored



Item No.: 210-118
Steel carrier rail; 35 x 15 mm; 2.3 mm thick; 2 m long; unslotted; according to EN 60715; silver-colored



Item No.: 210-112
Steel carrier rail; 35 x 7.5 mm; 1 mm thick; 2 m long; slotted; according to EN 60715; "Hole width 25 mm; silver-colored



Item No.: 210-113
Steel carrier rail; 35 x 7.5 mm; 1 mm thick; 2 m long; unslotted; according to EN 60715; silver-colored

1.1.2 Marking

1.1.2.1 Group marker carrier



Item No.: 750-107
Group marker carrier

1.1.2.2 Marker



Item No.: 2009-145/000-006
Mini-WSB Inline; for Smart Printer; 1700 pieces on roll; stretchable 5 - 5.2 mm; plain; snap-on type; blue



Item No.: 2009-145/000-007
Mini-WSB Inline; for Smart Printer; 1700 pieces on roll; stretchable 5 - 5.2 mm; plain; snap-on type; gray



Item No.: 2009-145/000-023
Mini-WSB Inline; for Smart Printer; 1700 pieces on roll; stretchable 5 - 5.2 mm; plain; snap-on type; green



Item No.: 2009-145/000-012
Mini-WSB Inline; for Smart Printer; 1700 pieces on roll; stretchable 5 - 5.2 mm; plain; snap-on type; orange



Item No.: 2009-145/000-005
Mini-WSB Inline; for Smart Printer; 1700 pieces on roll; stretchable 5 - 5.2 mm; plain; snap-on type; red



Item No.: 2009-145/000-024
Mini-WSB Inline; for Smart Printer; 1700 pieces on roll; stretchable 5 - 5.2 mm; plain; snap-on type; violet



Item No.: 2009-145
Mini-WSB Inline; for Smart Printer; 1700 pieces on roll; stretchable 5 - 5.2 mm; plain; snap-on type; white



Item No.: 2009-145/000-002
Mini-WSB Inline; for Smart Printer; 1700 pieces on roll; stretchable 5 - 5.2 mm; plain; snap-on type; yellow

Continued on next page

1.1.2.2 Marker



Item No.: 248-501/000-006
Mini-WSB marking card; as card; not stretchable; plain; snap-on type; blue



Item No.: 248-501/000-007
Mini-WSB marking card; as card; not stretchable; plain; snap-on type; gray



Item No.: 248-501/000-023
Mini-WSB marking card; as card; not stretchable; plain; snap-on type; green



Item No.: 248-501/000-017
Mini-WSB marking card; as card; not stretchable; plain; snap-on type; light green



Item No.: 248-501/000-012
Mini-WSB marking card; as card; not stretchable; plain; snap-on type; orange



Item No.: 248-501/000-005
Mini-WSB marking card; as card; not stretchable; plain; snap-on type; red



Item No.: 248-501/000-024
Mini-WSB marking card; as card; not stretchable; plain; snap-on type; violet



Item No.: 248-501
Mini-WSB marking card; as card; not stretchable; plain; snap-on type; white



Item No.: 248-501/000-002
Mini-WSB marking card; as card; not stretchable; plain; snap-on type; yellow

1.1.2.3 Marker carrier



Item No.: 750-103
Group marker carrier

1.1.3 Shield termination

1.1.3.1 Shield clamping saddles



Item No.: 790-108
Shield clamping saddle; 11 mm wide; diameter of compatible conductor; 3 … 8 mm



Item No.: 790-208
Shield clamping saddle; 12.4 mm wide; 3 … 8 mm



Item No.: 790-116
Shield clamping saddle; 19 mm wide; diameter of compatible conductor; 7 … 16 mm



Item No.: 790-216
Shield clamping saddle; 21.8 mm wide; 6 … 16 mm



Item No.: 790-124
Shield clamping saddle; 27 mm wide; diameter of compatible conductor; 6 … 24 mm



Item No.: 790-220
Shield clamping saddle; 30 mm wide; 6 … 20 mm



Item No.: 790-140
Shield clamping saddle; diameter of compatible conductor

1.1.4 System enclosure

1.1.4.1 System enclosure



Item No.: 850-825
IP65 enclosure; Aluminium (RAL 7032); WxHxD (160x100x160 mm); 9 x M12, 4 x M20



Item No.: 850-826
IP65 enclosure; Aluminium (RAL 7032); WxHxD (240x100x160 mm); 4 x M20, 4 x M16, 14 x M12 cable grip



Item No.: 850-827
IP65 enclosure; Aluminium (RAL 7032); WxHxD (320x100x160 mm); 4 x M20, 8 x M16, 17 x M12 cable grip



Item No.: 850-828
IP65 enclosure; Aluminium (RAL 7032); WxHxD (480x100x160 mm); 4 x M20, 10 x M16, 35 x M12 cable grip



Item No.: 850-826/002-000
IP65 enclosure; Aluminium (RAL 7035); WxHxD (240x100x160 mm); 4 x M20, 4 x M16, 14 x M12 cable grip



Item No.: 850-827/002-000
IP65 enclosure; Aluminium (RAL 7035); WxHxD (320x100x160 mm); 4 x M20, 8 x M16, 17 x M12 cable grip



Item No.: 850-828/002-000
IP65 enclosure; Aluminium (RAL 7035); WxHxD (480x100x160 mm); 4 x M20, 10 x M16, 35 x M12 cable grip



Item No.: 850-834
IP65 enclosure; Polyester (RAL 7032); WxHxD (164x100x164 mm); 9 x M12, 4 x M20



Item No.: 850-835
IP65 enclosure; Polyester (RAL 7032); WxHxD (244x100x164 mm); 4 x M20, 4 x M16, 14 x M12 cable grip



Item No.: 850-836
IP65 enclosure; Polyester (RAL 7032); WxHxD (324x100x164 mm); 4 x M20, 8 x M16, 17 x M12 cable grip



Item No.: 850-814/002-000
IP65 enclosure; Sheet steel (RAL 7035); WxHxD (200x120x200 mm); without flange plate



Item No.: 850-815/002-000
IP65 enclosure; Sheet steel (RAL 7035); WxHxD (300x120x200 mm); without flange plate

Continued on next page

1.1.4.1 System enclosure



Item No.: 850-816/002-000
IP65 enclosure; Sheet steel (RAL 7035); WxHxD (400x120x200 mm); without flange plate



Item No.: 850-817/002-000
IP65 enclosure; Sheet steel (RAL 7035); WxHxD (600x120x200 mm); without flange plate