Data Sheet | Item Number: 750-484/040-000

2-channel analog input; 4 … 20 mA HART; Intrinsically safe; Extreme

https://www.wago.com/750-484/040-000

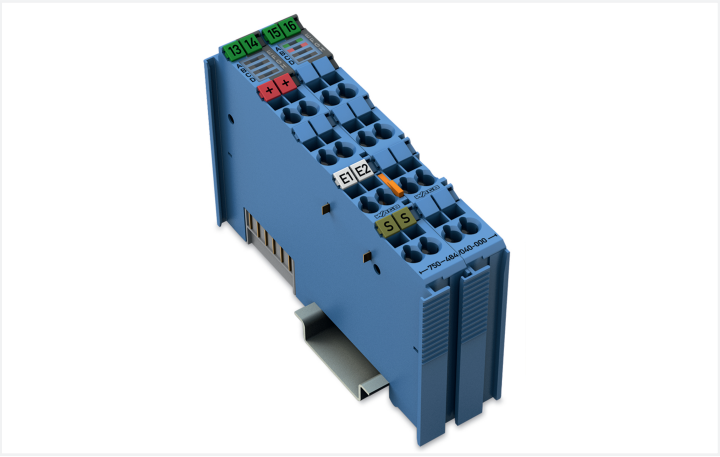

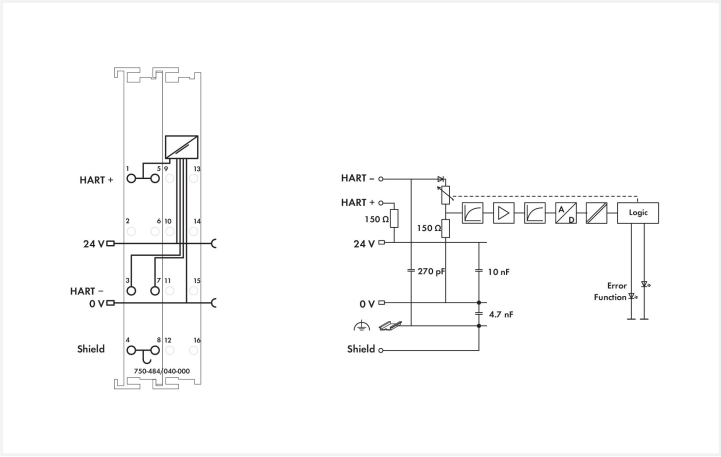

Color: ■ blue

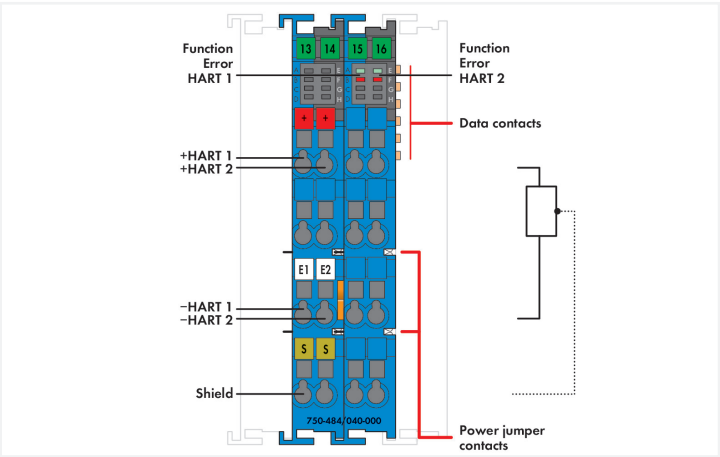

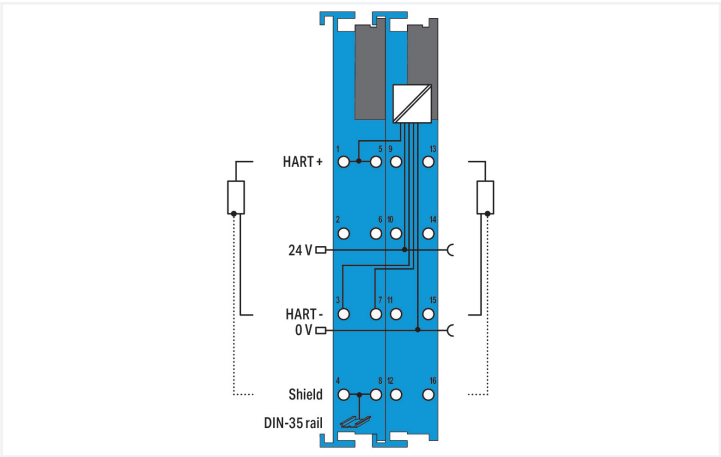

This analog input module connects two field-side signal conditioners equipped with a HART interface for use in hazardous areas classified as Zone 0 and Zone 1. The module supplies power to the signal conditioners, acquires process values via the analog interface, and enables HART communication for device configuration and retrieval of dynamic variables.
The WAGO I/O System 750 XTR must be installed either in Zone 2 or in a non-hazardous area.
The 24 V supply voltage is routed from the power jumper contacts to the field-side terminals (HART+) via series resistors. The shield connection directly connects to the DIN-rail.
The measurement input is equipped with current limitation, which limits the current to 25 mA. This module powers 2-wire signal conditioners without dedicated power supply.
Up to 4 HART dynamic variables (PV, SV, TV, QV) per channel can be mapped in the cyclic process image of the coupler or controller (parameterizable). For HART communication with connected intelligent HART field devices, the HART protocol can be mapped in the cyclic process image of the coupler or controller (parameterizable).
FDT/DTM device drivers are available for select (programmable) couplers, allowing HART tool routing to the connected HART device.

The device is ideal for operation in extreme environments thanks to:

- An extended temperature range
- Greater immunity to impulse voltages and electromagnetic interference
- Higher vibration and shock resistance

Notes

Note	The analog output module must only be operated with a 24 VDC Ex i XTR power supply (750-606/040-000)! General information on explosion protection, including installation regulations, can be found in the WAGO I/O System 750 XTR manuals!

Technical data

Item description	2-Channel Analog Input; 4 … 20 mA HART; Intrinsically safe
Number of analog inputs	2
Total number of channels (module)	2
Signal type	Current
Signal type (current)	4 … 20 mADC
Sensor connection	2 x (2-wire)
Input filter	parameterizable
Input filter: parametrizable (channel by channel)	Yes
Signal characteristics	Single-ended
Sensor supply	16.5 VDC
Overvoltage protection	30 V, reverse polarity protected
Resolution [bit]	12 bits
Conversion time (typ.)	10 ms
Measurement error (reference temperature)	25 °C
Measurement error, deviation (max.) from the upper-range value	0.2 %
Temperature error (max.) of the upper-range value	0.01 %/K
Intrinsically safe Ex i	Yes
Diagnostics	Wire break, measurement range overflow
Data width	2 x 2-byte data; 2 x 2-byte data + 2n x 4-byte data (n = number of dynamic variables); 2 x 2-byte data + 6-byte mailbox
HART devices per channel	1 device (single-drop, no multi-drop)
HART modems per channel	1 modem (no multiplex)
Supply voltage (system)	5 VDC; via data contacts
Current consumption (system supply)	25 mA
Supply voltage (field)	24 VDC; (Ex i XTR power supply: U_o = max. 26.8); via power jumper contacts (supply via blade contact; distribution via spring contact)
Current consumption, field supply (module with no external load)	26 mA
Power consumption $P_{max.}$	1.60 W (with slaves (20 mA))
Power loss P_l	0.62 W (without slaves)
Isolation	300 VAC system/supply
Rated impulse withstand voltage	1 kV; Rated surge voltage between intrinsically safe and non-intrinsically safe circuits: 1.5 kV (EN 60079-11)
Number of incoming power jumper contacts	2
Number of outgoing power jumper contacts	2
Current carrying capacity (power jumper contacts)	1 A
Indicators	LED (A, E) green: Function HART 1, HART 2; LED (B, F) red: Error HART 1, HART 2

Explosion protection

Identification	**ATEX:** II 3 (1) G Ex ec [ia Ga] IIC T4 Gc; II (1) D [Ex ia Da] IIIC; I (M1) [Ex ia Ma] I **IECEx/INMETRO:** Ex ec [ia Ga] IIC T4 Gc; [Ex ia Da] IIIC; [Ex ia Ma] I **cULus (Devision classified):** Class I, Div. 2, Group A B C D, T4
Ex standard	EN/IEC 60079-0, -7, -11
Safety-relevant data (circuit)	U_o = 26.8 V; I_o = 90.07 mA; P_o = 603.5 mW; linear characteristic curve
Reactances Ex ia IIC	L_o = 1.8 mH; C_o = 0.092 µF
Reactances Ex ia IIB	L_o = 16 mH; C_o = 0.72 µF
Reactances Ex ia IIA	L_o = 27 mH; C_o = 2.37 µF
Reactances Ex ia I	L_o = 38 mH; C_o = 3.85 µF
Reactances (note)	Reactances without accounting for the concurrence of capacitance (C_o) and inductance (L_o)

Continued on next page

Connection Data

Connection technology: I/O	6 x CAGE CLAMP®
Connectable conductor materials	Copper
Connection type	Inputs/outputs
Solid conductor	0.25 … 2.5 mm² / 24 … 14 AWG
Fine-stranded conductor	0.25 … 2.5 mm² / 24 … 14 AWG
Strip length	8 … 9 mm / 0.31 … 0.35 inches

Physical data

Width	24 mm / 0.945 inches
Height	100 mm / 3.937 inches
Depth	67.8 mm / 2.669 inches
Depth from upper-edge of DIN-rail	60.6 mm / 2.386 inches

Mechanical data

Mounting type	DIN-35 rail

Material data

Color	blue
Housing material	Polycarbonate; polyamide 6.6
Fire load	1.586 MJ
Weight	92.9 g
Conformity marking	CE

Environmental requirements

Ambient temperature (operation)	-40 … +70 °C
Ambient temperature (storage)	-40 … +85 °C
Ambient temperature (installation)	-20 … +70 °C
Protection type	IP20
Pollution degree	2 per IEC 61131-2
Operating altitude	without temperature derating: 0 … 2000 m; with temperature derating: 2000 … 5000 m (0.5 K/100 m); 5000 m (max.)
Mounting position	Horizontal left, horizontal up, vertical top and vertical bottom
Relative humidity (without condensation)	95 %
Relative humidity (with condensation)	Short-term condensation per Class 3K7/IEC EN 60721-3-3 and E-DIN 40046-721-3 (except for wind-driven precipitation, water and ice formation)
Vibration resistance	Per IEC 60068-2-6 (acceleration: 5g), EN 60870-2-2, IEC 60721-3-1, -3
Shock resistance	per IEC 60068-2-27 (15g/11 ms/half-sine/1,000 shocks; 25g/6 ms/1,000 shocks), EN 61373
Corrosion Resistance	Conformal Coating: yes EN/IEC 60068-2-60: Method 4 ISA S71.04: G3 Group A
EMC immunity to interference	per EN 61000-6-1, -2, EN 61131-2, marine applications, EN 60255-26, EN 60870-2-1, EN 61850-3, IEC 61000-6-5, IEEE 1613, VDEW: 1994
EMC emission of interference	per EN 61000-6-3, -4, EN 61131-2, EN 60255-26, marine applications, EN 60870-2-1, EN 61850-3
Exposure to pollutants	per IEC 60068-2-42 and IEC 60068-2-43
Permissible H_2S contaminant concentration at a relative humidity 75 %	10 ppm
Permissible SO_2 contaminant concentration at a relative humidity 75 %	25 ppm

Continued on next page

Commercial data

PU (SPU)	1 pcs
Packaging type	Box
Country of origin	DE
GTIN	4055143649506
Customs tariff number	85437090990

Product Classification

UNSPSC	32151705
eCl@ss 10.0	27-24-26-01
eCl@ss 9.0	27-24-26-01
ETIM 9.0	EC001596
ETIM 10.0	EC001596
ECCN	NO US CLASSIFICATION

Environmental Product Compliance

CAS-No.	11120-22-2 1303-86-2 1317-36-8 7439-92-1 79-94-7 872-50-4
REACH Candidate List Substance	2,2',6,6'-tetrabromo-4,4'-isopropylidenediphenol Diboron trioxide Lead Lead monoxide Lead silicate N-Methylpyrrolidone
RoHS Compliance Status	Compliant,With Exemption
RoHS Exemption	6(c) 7(a) 7(c)-I 7(c)-II
SCIP notification number (Austria)	9a8b48c6-272c-45f7-a1e2-39d892165c8d
SCIP notification number (Belgium)	bb2aed7f-1fa9-4afa-bd5a-1073196aae57
SCIP notification number (Bulgaria)	a4e8962e-a190-4c19-a152-dd2e99b8d78b
SCIP notification number (Czech Republic)	26cba8f5-a854-4c6f-8af7-30730c0c6af9
SCIP notification number (Denmark)	94ab09fb-43fb-473d-afbf-72e3ed07e808
SCIP notification number (Finland)	3bd4bfc5-edcf-40bf-9b66-e9c9a8525deb
SCIP notification number (France)	aa929a44-4599-48d0-a7ad-48be4b37d01e
SCIP notification number (Germany)	8c76d594-2822-4686-9754-b0a6abc87543
SCIP notification number (Hungary)	a191eecd-2955-4911-9dea-cd6193a213c6
SCIP notification number (Italy)	09fcab83-0d07-47b4-84f0-7d04e965d3b6
SCIP notification number (Netherlands)	61b55714-a174-4ab0-9177-64e32aaa1148
SCIP notification number (Poland)	f5c6eb7f-2b1f-43ce-b395-3d66ffbdd1a9
SCIP notification number (Romania)	1b1cc5c4-a7b0-4362-8e95-e260694f65b7
SCIP notification number (Sweden)	33064c31-34a0-4eff-bd6b-236275228b85

Continued on next page

Approvals / Certificates

General approvals

Approval	Standard	Certificate Name
EAC GZO Almaty Standart	TP TC 020/2011	EAC CoC 03083
UL Underwriters Laboratories Inc. (ORDINARY LOCATIONS)	-	E175199

Declarations of conformity and manufacturer's declarations

Approval	Standard	Certificate Name
EU-Ex-Declaration of Conformity WAGO GmbH & Co. KG	-	-
UK-Ex-Declaration of Conformity WAGO GmbH & Co. KG	-	-

Approvals for marine applications

Approval	Standard	Certificate Name
ABS American Bureau of Shipping	-	22-2208829-PDA
DNV DNV GL SE	-	TAA00000Y7
LR Lloyds Register	-	LR22276776TA
PRS Polski Rejestr Statków	-	TE/1099/880590/23

Approvals for hazardous areas

Approval	Standard	Certificate Name
ATEX TUEV Nord Cert GmbH	EN 60079-0	TUEV_17_ATEX_196484X (Ex ec[iaGa] IIC T4 Gc, [Ex iaDa] IIIC, [Ex iaMa] I)
CCC CNEX	CNCA-C23-01	2020312310000212 (Ex ec [iaGa]IIC T4 Gc, [Ex ia Da]II-IC, [Ex ia Ma]I)
IECEx TUEV Nord Cert GmbH	IEC 60079-0	IECEx TUN 17.0005X (Ex ec [iaGa] IIC T4 Gc, [Ex iaDa] II-IC, [Ex iaMa] I)
UKEx Element Materials Technology UK	-	EMA21UKEX0043X
UL Underwriters Laboratories Inc. (HAZARDOUS LOCATIONS)	UL 121201	E198726

Downloads

Environmental Product Compliance

Compliance Search

Environmental Product Compliance 750-484/040-000	

Documentation

Manual

Product Manual 2-channel, 4-20mA, HART, Ex i, single ended /XTR	V 1.1.0 08.06.2020	pdf 4734.02 KB	

System Description

Intrinsically Safe XTR Modules – General Product Information	pdf 214.93 KB	
Overview on WAGO-I/O-SYSTEM 750 approvals	pdf 770.48 KB	

Continued on next page

Bid Text

750-484/040-000	13.09.2018	doc 37.00 KB	
750-484/040-000	19.02.2019	xml 10.24 KB	

Instruction Leaflet

CCC Ex (Additional information)	26.04.2023	pdf 143.50 KB	

Application Notes

Application Note CoDeSys 2.3

HART Tool Routing via ETHERNET with 750-820x/750-88x and CODESYS 2.3 (a116120)	1.0.0 22.03.2019	pdf 3798.36 KB	
HART Tool Routing via PROFIBUS with 750-833 and 750-333 (a116140)	1.0.0 22.03.2019	pdf 5214.96 KB	

Application Note e!COCKPIT

HART Tool Routing via ETHERNET with 750-820x and e!RUNTIME (a116130)	1.0.0 22.03.2019	pdf 2867.01 KB	

CAD/CAE-Data

CAD data

2D/3D Models
750-484/040-000

CAE data

EPLAN Data Portal
750-484/040-000

ZUKEN Portal
750-484/040-000

1 Compatible Products

1.1 Optional Accessories

1.1.1 DIN-rail

1.1.1.1 Mounting accessories



Item No.: 210-196
Aluminum carrier rail; 35 x 8.2 mm; 1.6 mm thick; 2 m long; unslotted; similar to EN 60715; silver-colored



Item No.: 210-198
Copper carrier rail; 35 x 15 mm; 2.3 mm thick; 2 m long; unslotted; according to EN 60715; copper-colored



Item No.: 210-197
Steel carrier rail; 35 x 15 mm; 1.5 mm thick; 2 m long; slotted; similar to EN 60715; silver-colored



Item No.: 210-114
Steel carrier rail; 35 x 15 mm; 1.5 mm thick; 2 m long; unslotted; similar to EN 60715; silver-colored



Item No.: 210-118
Steel carrier rail; 35 x 15 mm; 2.3 mm thick; 2 m long; unslotted; according to EN 60715; silver-colored



Item No.: 210-112
Steel carrier rail; 35 x 7.5 mm; 1 mm thick; 2 m long; slotted; according to EN 60715; "Hole width 25 mm; silver-colored



Item No.: 210-113
Steel carrier rail; 35 x 7.5 mm; 1 mm thick; 2 m long; unslotted; according to EN 60715; silver-colored

Continued on next page

1.1.2 Marking

1.1.2.1 Group marker carrier



Item No.: 750-107
Group marker carrier

1.1.2.2 Marker

Item No.: 2009-145/000-006
Mini-WSB Inline; for Smart Printer; 1700 pieces on roll; stretchable 5 - 5.2 mm; plain; snap-on type; blue

Item No.: 2009-145/000-007
Mini-WSB Inline; for Smart Printer; 1700 pieces on roll; stretchable 5 - 5.2 mm; plain; snap-on type; gray

Item No.: 2009-145/000-023
Mini-WSB Inline; for Smart Printer; 1700 pieces on roll; stretchable 5 - 5.2 mm; plain; snap-on type; green

Item No.: 2009-145/000-012
Mini-WSB Inline; for Smart Printer; 1700 pieces on roll; stretchable 5 - 5.2 mm; plain; snap-on type; orange

Item No.: 2009-145/000-005
Mini-WSB Inline; for Smart Printer; 1700 pieces on roll; stretchable 5 - 5.2 mm; plain; snap-on type; red

Item No.: 2009-145/000-024
Mini-WSB Inline; for Smart Printer; 1700 pieces on roll; stretchable 5 - 5.2 mm; plain; snap-on type; violet

Item No.: 2009-145
Mini-WSB Inline; for Smart Printer; 1700 pieces on roll; stretchable 5 - 5.2 mm; plain; snap-on type; white

Item No.: 2009-145/000-002
Mini-WSB Inline; for Smart Printer; 1700 pieces on roll; stretchable 5 - 5.2 mm; plain; snap-on type; yellow



Item No.: 248-501/000-006
Mini-WSB marking card; as card; not stretchable; plain; snap-on type; blue



Item No.: 248-501/000-007
Mini-WSB marking card; as card; not stretchable; plain; snap-on type; gray



Item No.: 248-501/000-023
Mini-WSB marking card; as card; not stretchable; plain; snap-on type; green



Item No.: 248-501/000-017
Mini-WSB marking card; as card; not stretchable; plain; snap-on type; light green



Item No.: 248-501/000-012
Mini-WSB marking card; as card; not stretchable; plain; snap-on type; orange



Item No.: 248-501/000-005
Mini-WSB marking card; as card; not stretchable; plain; snap-on type; red



Item No.: 248-501/000-024
Mini-WSB marking card; as card; not stretchable; plain; snap-on type; violet



Item No.: 248-501
Mini-WSB marking card; as card; not stretchable; plain; snap-on type; white



Item No.: 248-501/000-002
Mini-WSB marking card; as card; not stretchable; plain; snap-on type; yellow

1.1.2.3 Marker carrier



Item No.: 750-103
Group marker carrier

1.1.3 Power supply

1.1.3.1 Supply module



Item No.: 750-606/040-000
Power Supply; 24 VDC; Diagnostics; Intrinsically safe; Extreme

1.1.4 Shield termination

1.1.4.1 Shield clamping saddles



Item No.: 790-108
Shield clamping saddle; 11 mm wide; diameter of compatible conductor; 3 … 8 mm



Item No.: 790-208
Shield clamping saddle; 12.4 mm wide; 3 … 8 mm



Item No.: 790-116
Shield clamping saddle; 19 mm wide; diameter of compatible conductor; 7 … 16 mm



Item No.: 790-216
Shield clamping saddle; 21.8 mm wide; 6 … 16 mm



Item No.: 790-124
Shield clamping saddle; 27 mm wide; diameter of compatible conductor; 6 … 24 mm



Item No.: 790-220
Shield clamping saddle; 30 mm wide; 6 … 20 mm



Item No.: 790-140
Shield clamping saddle; diameter of compatible conductor