Data Sheet | Item Number: 750-489

4-channel analog input; RTD/TC/Strain Gauge; 16 bits; Diagnostics; Intrinsically safe

https://www.wago.com/750-489



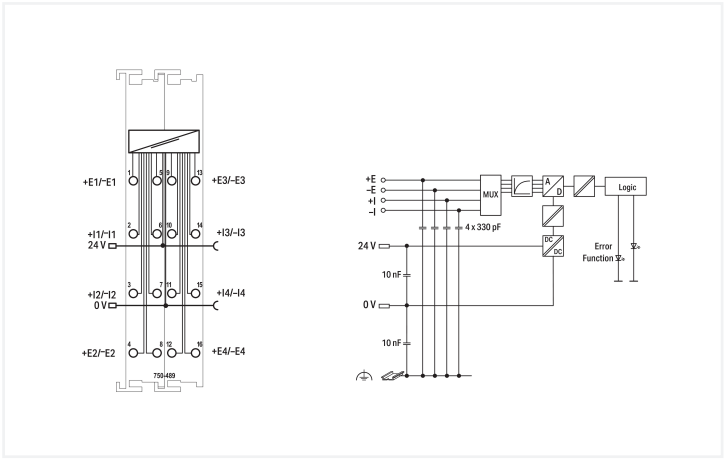

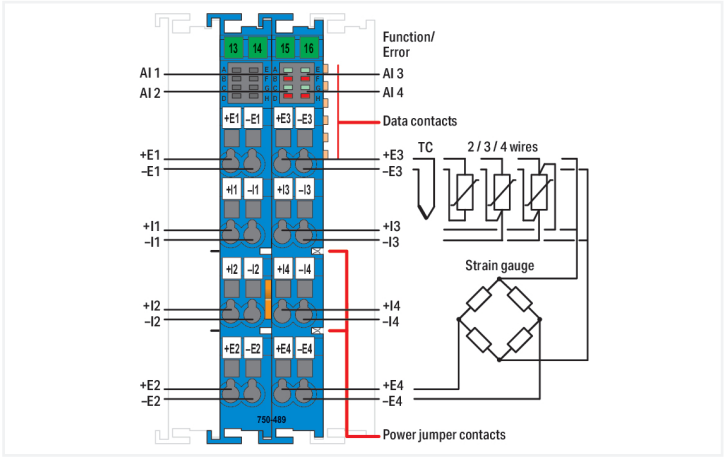

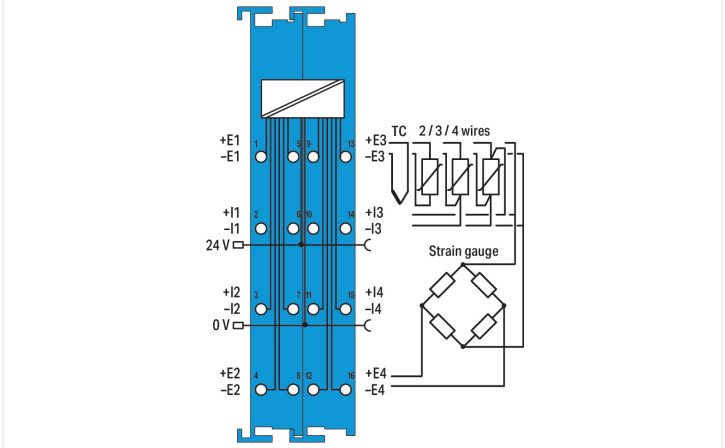

This analog input module enables direct connection of resistance temperature detectors (RTDs), thermocouples, millivolt sensors, resistors, strain gauge bridges, potentiometers, and PTC thermistors operating in hazardous areas classified as Zone 0 and Zone 1. Cold junction compensation for each channel is integrated into the module.
The WAGO I/O System 750 must be installed either in Zone 2 or in a non-hazardous area.
The 24 V supply is derived from the module's power jumper contacts.
The shield directly connects to the DIN-rail.
The parameters are set via the GSD file, ***e!****COCKPIT* or WAGO-I/O-*CHECK*.

Indicators:

- Green LED (availability ON/OFF)
- Red LED (underflow, overflow, measurement range overflow/underflow)

Field and system levels are electrically isolated.
A functional galvanic isolation is provided between the channels.

Notes

Note	The analog output module must only be operated with a 24 VDC Ex i power supply! General information on explosion protection, including installation regulations, can be found in the WAGO I/O System 750/753 manuals!

Technical data

Item description	4-Channel Analog Input; RTD/TC
Number of analog inputs	4
Total number of channels (module)	4
Signal type	Potentiometer positions Thermocouple Resistive temperature device Resistors mV encoder
Signal type (configurable)	Yes
Sensor connection	4 x (2-wire, 3-wire, 4-wire)
Measurement range	**RTDs**: Pt100, Pt200, Pt500, Pt1000, Ni100, Ni120, Ni200, Ni500, Ni1000, Ni1000-TK5000; **Resistors:** 250 Ω, 500 Ω, 1 kΩ, 2 kΩ, 4 kΩ, PTC; **Potentiometer setting**: 0 … 100 %; **Thermocouples**: Type B; Type C; Type E; Type J; Type K; Type N; Type R, S; Type T; **mV sensors:** ±30 mV; ±60 mV; ±120 mV; ±250 mV; ±500 mV; ±1,000 mV; ±2,000 mV; PTC thermistor; **Resistor bridges (strain gauges)**
Resolution (over entire range)	0.1 K of full scale value; 0.01 K of full scale value (limited to –50 … +150 °C [–58 … +302 °F])
Conversion time	≥10 ms/2 wires (per channel)*; ≥20 ms/3 wires, 4 wires (per channel)*; *for RTD/R; TC/U conversion time depends on module setting
Reference for measurement error	at 0 ≤ TA ≤ 55 °C
Measurement error (reference temperature)	25 °C
Measurement error, deviation (max.) from the upper-range value	±0.2 %
Reference for measurement error (2)	during user calibration
Measurement error, reference temperature (2)	25 °C
Measurement error, deviation (max.) of the upper-range value (2)	±0.05 %
Temperature error (max.) of the upper-range value	±0.001 %/K
Cold junction compensation	integrated
Intrinsically safe Ex i	Yes
Data width	4 x 16-bit data; 4 x 8-bit control/status (optional)
Supply voltage (system)	5 VDC; via data contacts
Current consumption (system supply)	50 mA
Supply voltage (field)	24 VDC; (Ex i power supply: U_o = max. 26.8 V); via power jumper contacts (supply via blade contact; distribution via spring contact)
Current consumption, field supply (module with no external load)	50 mA
Power consumption $P_{max.}$	1.6 W (RTD/TC operation)
Power loss P_l	1.6 W (RTD/TC operation)
Isolation	300 VAC system/supply; 1200 VDC system/supply/channel
Number of incoming power jumper contacts	2
Number of outgoing power jumper contacts	2
Indicators	LED (A, C, E, G) green: Function AI 1 … AI 4; LED (B, D, F, H) red: Error AI 1 … AI 4

Explosion protection

Identification	**ATEX:** II 3 (1) G Ex ec [ia Ga] IIC T4 Gc; II (1) D [Ex ia Da] IIIC; I (M1) [Ex ia Ma] I **IECEx/INMETRO:** Ex ec [ia Ga] IIC T4 Gc; [Ex ia Da] IIIC; [Ex ia Ma] I **cULus (Devision classified):** Class I, Div. 2, Group A B C D, T4
Ex standard	EN IEC 60079-0, -7, -11
Safety-relevant data (circuit)	U_o = 4 V; I_o = 21.45 mA; P_o = 21.45 mW; linear characteristic curve
Reactances Ex ia IIC	L_o = 0.08 H; C_o = 100 µF
Reactances Ex ia IIB	L_o = 0.31 H; C_o = 1000 µF
Reactances Ex ia IIA	L_o = 0.62 H; C_o = 1000 µF
Reactances Ex ia I	L_o = 1.01 H; C_o = 1000 µF

Continued on next page

Explosion protection

Reactances (note)	Reactances, if the internal inductance L_i or capacitance C_i (without cable) of the connected device is ≤1 % of the specified values. Specified values for the worst case in strain gage operation; see manual for values for other operating modes.

Connection Data

Connection technology: I/O	16 x CAGE CLAMP®
Connectable conductor materials	Copper
Connection type	Inputs/outputs
Solid conductor	0.08 … 2.5 mm² / 28 … 14 AWG
Fine-stranded conductor	0.08 … 2.5 mm² / 28 … 14 AWG
Strip length	8 … 9 mm / 0.31 … 0.35 inches

Physical data

Width	24 mm / 0.945 inches
Height	100 mm / 3.937 inches
Depth	67.8 mm / 2.669 inches
Depth from upper-edge of DIN-rail	60.6 mm / 2.386 inches

Mechanical data

Mounting type	DIN-35 rail

Material data

Housing material	Polycarbonate; polyamide 6.6
Fire load	1.672 MJ
Weight	99.3 g
Conformity marking	CE

Environmental requirements

Ambient temperature (operation)	0 … +55 °C
Ambient temperature (storage)	-25 … +85 °C
Protection type	IP20
Pollution degree	2 per IEC 61131-2
Operating altitude	0 … 2000 m / 0 … 6562 ft
Mounting position	Horizontal left, horizontal right, horizontal top, horizontal bottom, vertical top and vertical bottom
Relative humidity (without condensation)	95 %
Vibration resistance	4g per IEC 60068-2-6
Shock resistance	15g per IEC 60068-2-27
EMC immunity to interference	per EN 61000-6-2, marine applications
EMC emission of interference	per EN 61000-6-3, marine applications
Exposure to pollutants	per IEC 60068-2-42 and IEC 60068-2-43

Continued on next page

Commercial data

PU (SPU)	1 pcs
Packaging type	Box
Country of origin	DE
GTIN	4055143948029
Customs tariff number	85437090990

Product Classification

UNSPSC	32151705
ETIM 9.0	EC001596
ETIM 10.0	EC001596
ECCN	NO US CLASSIFICATION

Environmental Product Compliance

RoHS Compliance Status	Compliant,No Exemption
SCIP notification number (Austria)	2e967755-29fa-4c20-883b-b9085830cedb
SCIP notification number (Belgium)	2b743fd2-d462-4b6d-b4a1-7992ed6bca5f
SCIP notification number (Bulgaria)	cd3136c4-5842-493a-a6c7-aaccbae35441
SCIP notification number (Czech Republic)	06e947da-9a5e-4f16-86d6-d6c3a2a72497
SCIP notification number (Denmark)	7f96b952-ca60-43e7-b2df-fb463a8cb615
SCIP notification number (Finland)	2d55b01b-e34c-4619-a37c-47e3d79f3158
SCIP notification number (France)	a325a1e0-ba65-4396-a8ab-1b4499385f8f
SCIP notification number (Germany)	85e3688e-39a6-447b-aa87-ad08b282a833
SCIP notification number (Hungary)	5df6d0ea-10d7-4caf-85f2-5569529bf243
SCIP notification number (Italy)	2616f35b-5661-4756-8961-a4f345a9e642
SCIP notification number (Netherlands)	f4f4df14-9da6-4e9c-b012-e425bf3a5b61
SCIP notification number (Poland)	97af6679-bfe0-4362-bcc4-b2ff7c57ccfb
SCIP notification number (Romania)	5d2755b8-7838-4e0c-9775-0a99aa0c54a9
SCIP notification number (Sweden)	f00e1d03-d337-4ba2-94ea-69972672f649

Approvals / Certificates

General approvals

Approval	Standard	Certificate Name
EAC GZO Almaty Standart	TP TC 020/2011	EAC CoC 03083
KC National Radio Research Agency	Article 58-2, Clause 3	MSIP-REM-W43-AIM750
UL Underwriters Laboratories Inc. (ORDINARY LOCATIONS)	-	E175199

Declarations of conformity and manufacturer's declarations

Approval	Standard	Certificate Name
EU-Ex-Declaration of Conformity WAGO GmbH & Co. KG	-	-
UK-Ex-Declaration of Conformity WAGO GmbH & Co. KG	-	-

Continued on next page

Approvals for marine applications

Approval	Standard	Certificate Name
DNV DNV GL SE	DNV-CG-0339,Aug.2021	TAA0000194
KR Korean Register of Shipping	-	KR HMB05880-AC001
PRS Polski Rejestr Statków	-	TE/1101/880590/23

Approvals for hazardous areas

Approval	Standard	Certificate Name
ATEX TUEV Nord Cert GmbH	EN 60079	TUEV12ATEX106032X (Ex ec[iaGa] IIC T4 Gc, [Ex iaDa] IIIC, [Ex iaMa] I)
CCC CNEX	CNCA-C23-01	2020312310000211 (Ex ec [iaGa] IIC T4 Gc, [Ex iaDa] II-IC, [Ex iaMa] I)
IECEx TUEV Nord Cert GmbH	IEC 60079	IECEx TUN12.0039X (Ex ec [iaGa] IIC T4 Gc, [Ex iaDa] II-IC, [Ex iaMa] I)
INMETRO TÜV Rheinland do Brasil Ltda.	-	TÜV_14.1911_X
KTL Korea Testing Laboratory	KOSHA Article 34, IEC60079-0	21-KA4BO-0605X
UKEx Element Materials Technology UK	-	EMA21UKEX0069X
UL Underwriters Laboratories Inc. (HAZARDOUS LOCATIONS)	UL 121201	E198726

Downloads

Environmental Product Compliance

Compliance Search

Environmental Product Compliance 750-489	

Documentation

Manual

Product Manual 4AI RTD/TC/Strain Gauge Ex i	5055556875 | 3 | en-US | 2026-07-10 10:48 14.07.2026	pdf 14085.74 KB	

System Description

750/753 Series I/O-System – General Product Information	pdf 953.35 KB	
Overview on WAGO-I/O-SYSTEM 750 approvals	pdf 770.48 KB	
Ex i Overview	pdf 442.07 KB	

Bid Text

750-489	xml 8.95 KB	
750-489	docx 17.19 KB	

Instruction Leaflet

CCC Ex (Additional information)	26.04.2023	pdf 143.96 KB	

Continued on next page

CAD/CAE-Data

CAD data	CAE data
2D/3D Models 750-489	EPLAN Data Portal 750-489
	ZUKEN Portal 750-489

Runtime Software

Firmware

0750-0489, 4-Kanal-Analogeingang; Widerstandssensoren/Thermoelemente/Widerstandsbrücken	V 05 23.05.2024	zip 188.08 KB	

1 Compatible Products

1.1 Optional Accessories

1.1.1 DIN-rail

1.1.1.1 Mounting accessories



Item No.: 210-196
Aluminum carrier rail; 35 x 8.2 mm; 1.6 mm thick; 2 m long; unslotted; similar to EN 60715; silver-colored



Item No.: 210-198
Copper carrier rail; 35 x 15 mm; 2.3 mm thick; 2 m long; unslotted; according to EN 60715; copper-colored



Item No.: 210-197
Steel carrier rail; 35 x 15 mm; 1.5 mm thick; 2 m long; slotted; similar to EN 60715; silver-colored



Item No.: 210-114
Steel carrier rail; 35 x 15 mm; 1.5 mm thick; 2 m long; unslotted; similar to EN 60715; silver-colored



Item No.: 210-118
Steel carrier rail; 35 x 15 mm; 2.3 mm thick; 2 m long; unslotted; according to EN 60715; silver-colored



Item No.: 210-112
Steel carrier rail; 35 x 7.5 mm; 1 mm thick; 2 m long; slotted; according to EN 60715; "Hole width 25 mm; silver-colored



Item No.: 210-113
Steel carrier rail; 35 x 7.5 mm; 1 mm thick; 2 m long; unslotted; according to EN 60715; silver-colored

1.1.2 Marking

1.1.2.1 Group marker carrier



Item No.: 750-107
Group marker carrier

1.1.2.2 Marker



Item No.: 2009-145/000-006
Mini-WSB Inline; for Smart Printer; 1700 pieces on roll; stretchable 5 - 5.2 mm; plain; snap-on type; blue



Item No.: 2009-145/000-007
Mini-WSB Inline; for Smart Printer; 1700 pieces on roll; stretchable 5 - 5.2 mm; plain; snap-on type; gray



Item No.: 2009-145/000-023
Mini-WSB Inline; for Smart Printer; 1700 pieces on roll; stretchable 5 - 5.2 mm; plain; snap-on type; green



Item No.: 2009-145/000-012
Mini-WSB Inline; for Smart Printer; 1700 pieces on roll; stretchable 5 - 5.2 mm; plain; snap-on type; orange



Item No.: 2009-145/000-005
Mini-WSB Inline; for Smart Printer; 1700 pieces on roll; stretchable 5 - 5.2 mm; plain; snap-on type; red



Item No.: 2009-145/000-024
Mini-WSB Inline; for Smart Printer; 1700 pieces on roll; stretchable 5 - 5.2 mm; plain; snap-on type; violet



Item No.: 2009-145
Mini-WSB Inline; for Smart Printer; 1700 pieces on roll; stretchable 5 - 5.2 mm; plain; snap-on type; white



Item No.: 2009-145/000-002
Mini-WSB Inline; for Smart Printer; 1700 pieces on roll; stretchable 5 - 5.2 mm; plain; snap-on type; yellow

Continued on next page

1.1.2.2 Marker



Item No.: 248-501/000-006
Mini-WSB marking card; as card; not stretchable; plain; snap-on type; blue



Item No.: 248-501/000-007
Mini-WSB marking card; as card; not stretchable; plain; snap-on type; gray



Item No.: 248-501/000-023
Mini-WSB marking card; as card; not stretchable; plain; snap-on type; green



Item No.: 248-501/000-017
Mini-WSB marking card; as card; not stretchable; plain; snap-on type; light green



Item No.: 248-501/000-012
Mini-WSB marking card; as card; not stretchable; plain; snap-on type; orange



Item No.: 248-501/000-005
Mini-WSB marking card; as card; not stretchable; plain; snap-on type; red



Item No.: 248-501/000-024
Mini-WSB marking card; as card; not stretchable; plain; snap-on type; violet



Item No.: 248-501
Mini-WSB marking card; as card; not stretchable; plain; snap-on type; white



Item No.: 248-501/000-002
Mini-WSB marking card; as card; not stretchable; plain; snap-on type; yellow

1.1.2.3 Marker carrier



Item No.: 750-103
Group marker carrier

1.1.3 Shield termination

1.1.3.1 Shield clamping saddles



Item No.: 790-108
Shield clamping saddle; 11 mm wide; diameter of compatible conductor; 3 … 8 mm



Item No.: 790-208
Shield clamping saddle; 12.4 mm wide; 3 … 8 mm



Item No.: 790-116
Shield clamping saddle; 19 mm wide; diameter of compatible conductor; 7 … 16 mm



Item No.: 790-216
Shield clamping saddle; 21.8 mm wide; 6 … 16 mm



Item No.: 790-124
Shield clamping saddle; 27 mm wide; diameter of compatible conductor; 6 … 24 mm



Item No.: 790-220
Shield clamping saddle; 30 mm wide; 6 … 20 mm



Item No.: 790-140
Shield clamping saddle; diameter of compatible conductor

1.1.4 Supply module

1.1.4.1 Supply module



Item No.: 750-606
Power Supply; 24 VDC; Diagnostics; Intrinsically safe



Item No.: 750-625/000-001
Power Supply; 24 VDC; Intrinsically safe