# Data Sheet | Item Number: 750-494

3-Phase Power Measurement; 480 VAC, 1 A

https://www.wago.com/750-494

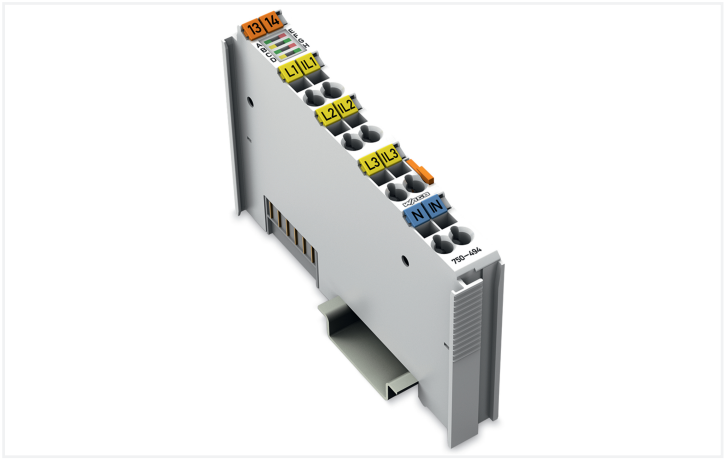

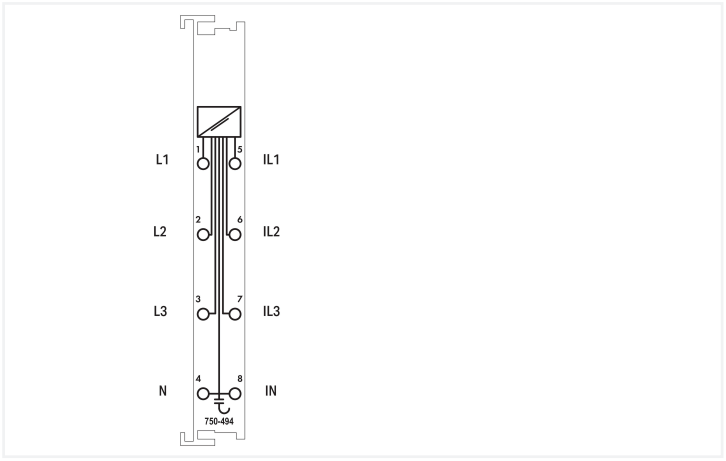


Color: light gray

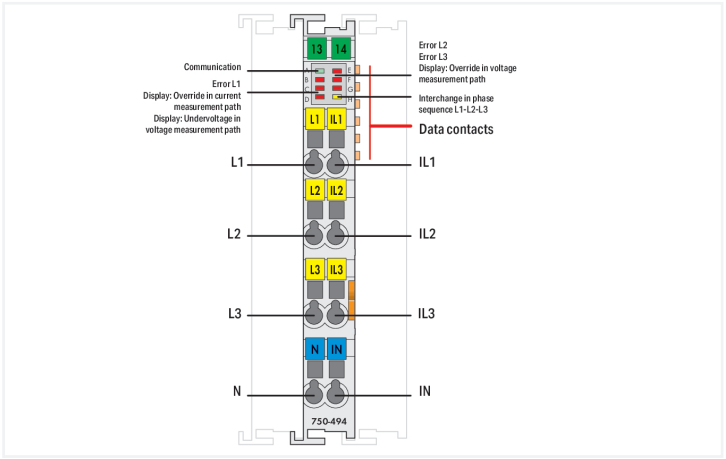


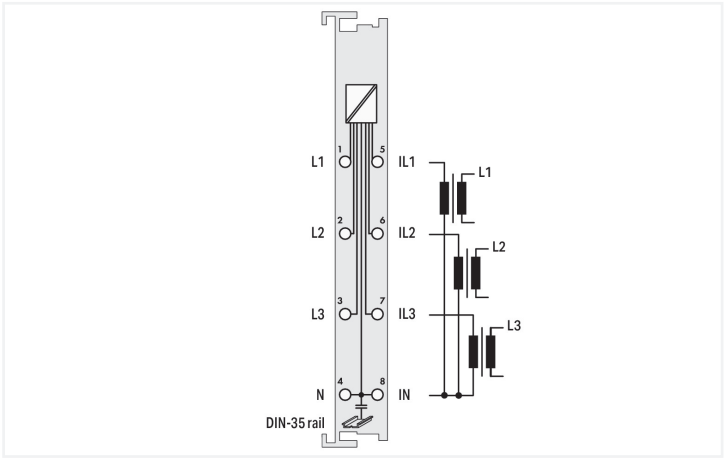


The 750-494 3-Phase Power Measurement Module measures electrical data in a three-phase supply network.
The voltage is measured via network connection to clamping points L1, L2, L3 and N.
The current of the three phases is fed to IL1, IL2, IL3, and IN via current transformers.
The 3-phase power measurement module transmits all metrics (e.g., reactive/apparent/effective power, energy consumption, power factor, phase angle, frequency, over-/undervoltage) directly to the process image, without requiring high computing power from the controller. Both comprehensive metrics and harmonic analysis up to the 41st harmonic permit extensive network analysis via the fieldbus. These metrics enable the operator to optimize supply to a drive or machine, protecting the system from damage and failure. The four-quadrant display indicates the load type (inductive, capacitive) and whether it is an energy consumer or producer.

| Technical data | |
|---|---|
| Number of measurement inputs | 6 (3 voltage measurement inputs, 3 current measurement inputs) |
| Signal type | Power measurement |
| Input voltage (max.) | Current Inputs: 18 VAC |
| Signal form | Any periodic signals (considering the threshold frequencies) |
| Resolution [bit] | 24 bits |
| Data width | 2 x 128-bit data; 2 x 64-bit control/status |
| Voltage path input resistance (typ.) | 1072 kΩ |
| Current path input resistance (typ.) | 22 mΩ |
| Reference for measurement error | AC current/voltage |
| Measurement error (reference temperature) | 25 °C |
| Measurement error, deviation (max.) from the upper-range value | 0.5 % |

## Technical data

| | |
|---|---|
| Measurement current (max.) | 1 A |
| Measurement cycle time | Adjustable for the arithmetic mean value, min./max. values |
| Frequency range (mains frequency) | 45 … 65 Hz |
| Frequency range (harmonics analysis) | 0 … 3300 Hz |
| Limit frequency | 15.9 kHz |
| Rated Voltage | $U_{LN}$ = 277 VAC; $U_{LL}$ = 480 VAC |
| Calculated values | Line-to-line voltage, power output, energy, power factors, mains frequency, harmonic analysis (up to the 41st harmonic), THD |
| Measurement method | True RMS measurement |
| Configuration options | WAGO-I/O-*CHECK*<br>CODESYS Library<br>***e!****COCKPIT* |
| Supply voltage (system) | 5 VDC; via data contacts |
| Current consumption (system supply) | 100 mA |
| Isolation | 4 kV system/field |
| Rated impulse withstand voltage | 4 kV |
| Indicators | LED (A) green: Communication; LED (B-G) red: Error L1, Override in Current Measurement Path (display), Undervoltage in Voltage Measurement Path (display), Error L2, Error L3, Override in Voltage Measurement Path (display); LED (H) yellow: Interchange in Phase Sequence L1-L2-L3 |

## Connection Data

| | |
|---|---|
| Connection technology: I/O | 8 x CAGE CLAMP® |
| Connectable conductor materials | Copper |
| Connection type | Inputs/outputs |
| Solid conductor | 0.08 … 2.5 mm² / 28 … 14 AWG |
| Fine-stranded conductor | 0.08 … 2.5 mm² / 28 … 14 AWG |
| Strip length | 8 … 9 mm / 0.31 … 0.35 inches |

## Physical data

| | |
|---|---|
| Width | 12 mm / 0.472 inches |
| Height | 100 mm / 3.937 inches |
| Depth | 67.8 mm / 2.669 inches |
| Depth from upper-edge of DIN-rail | 60.6 mm / 2.386 inches |

## Mechanical data

| | |
|---|---|
| Mounting type | DIN-35 rail |

## Material data

| | |
|---|---|
| Color | light gray |
| Housing material | Polycarbonate; polyamide 6.6 |
| Fire load | 0.876 MJ |
| Weight | 49.6 g |
| Conformity marking | CE |


Continued on next page

## Environmental requirements

| | |
|---|---|
| Ambient temperature (operation) | 0 … +55 °C |
| Ambient temperature (storage) | -40 … +85 °C |
| Protection type | IP20 |
| Pollution degree | 2 |
| Operating altitude | 0 … 2000 m / 0 … 6562 ft |
| Mounting position | Horizontal left, horizontal right, horizontal top, horizontal bottom, vertical top and vertical bottom |
| Relative humidity (without condensation) | 95 % |
| Vibration resistance | 4g per IEC 60068-2-6 |
| Shock resistance | 15g per IEC 60068-2-27 |
| EMC immunity to interference | per EN 61000-6-2 |
| EMC emission of interference | per EN 61000-6-3 |
| Exposure to pollutants | per IEC 60068-2-42 and IEC 60068-2-43 |
| Permissible $H_2S$ contaminant concentration at a relative humidity 75 % | 10 ppm |
| Permissible $SO_2$ contaminant concentration at a relative humidity 75 % | 25 ppm |

## Commercial data

| | |
|---|---|
| Product Group | 15 (I/O System) |
| PU (SPU) | 1 pcs |
| Packaging type | Box |
| Country of origin | DE |
| GTIN | 4050821548232 |
| Customs tariff number | 90308900000 |

## Product Classification

| | |
|---|---|
| UNSPSC | 41113630 |
| eCl@ss 10.0 | 27-24-26-05 |
| eCl@ss 9.0 | 27-24-26-05 |
| ETIM 9.0 | EC001596 |
| ETIM 10.0 | EC001596 |
| ECCN | NO US CLASSIFICATION |

## Environmental Product Compliance

| | |
|---|---|
| RoHS Compliance Status | Compliant,No Exemption |
| SCIP notification number (Austria) | 6751fb20-e77f-42f9-8909-ff11e9fc8990 |
| SCIP notification number (Belgium) | 56eb9410-401e-49a8-b2b6-4649bdd9a5b1 |
| SCIP notification number (Bulgaria) | 8dea98db-3e6b-497b-89b3-906410e9f55d |
| SCIP notification number (Czech Republic) | d4b46b93-65de-4e96-a18c-b9e4f3e427fb |
| SCIP notification number (Denmark) | 373321ab-036e-4d53-a5cf-312fac46e55b |
| SCIP notification number (Finland) | bcc5f37c-7820-452a-a569-53ad8314950d |
| SCIP notification number (France) | d71a6c73-2878-4a10-9a68-1c6598010ac4 |
| SCIP notification number (Germany) | 887005a7-e5b5-4faf-8895-9b97b481b884 |
| SCIP notification number (Hungary) | d86d6665-3f25-4730-891e-e650f2789d5e |
| SCIP notification number (Italy) | 60fac85f-f397-4122-b43e-21d65be01e79 |
| SCIP notification number (Netherlands) | fdb296f1-9fad-4839-9ce0-af9489c9f744 |
| SCIP notification number (Poland) | 01a8255e-4e30-43f9-9574-9addf52d1931 |
| SCIP notification number (Romania) | 616c9896-c53c-48e3-a0f6-493b97ccb7b8 |
| SCIP notification number (Sweden) | dde8ce05-89f9-4677-bb05-948fc7426253 |


Continued on next page

## Approvals / Certificates

### General approvals

| Approval | Standard | Certificate Name |
|---|---|---|
| EAC<br>GZO Almaty Standart | TP TC 020/2011 | EAC CoC 03083 |
| UL<br>Underwriters Laboratories Inc. (ORDINARY LOCATIONS) | - | E175199 |

### Declarations of conformity and manufacturer's declarations

| Approval | Standard | Certificate Name |
|---|---|---|
| EU-Declaration of Conformity<br>WAGO GmbH & Co. KG | - | - |
| UK-Declaration of Conformity<br>WAGO GmbH & Co. KG | - | - |

### Approvals for marine applications

| Approval | Standard | Certificate Name |
|---|---|---|
| BSH<br>Bundesamt fuer Seeschiffahrt und Hydrographie | - | 1104 |
| PRS<br>Polski Rejestr Statków | - | TE/1101/880590/23 |
| RINA<br>RINA Germany GmbH | - | ELE343521XG001 |

### Approvals for hazardous areas

| Approval | Standard | Certificate Name |
|---|---|---|
| ATEX<br>TUEV Nord Cert GmbH | EN 60079-0 | TUEV14ATEX148929X (II 3 G Ex ec IIC T4 Gc) |
| IECEx<br>TUEV Nord Cert GmbH | IEC 60079-0 | IECEx TUN 14.0035 X (Ex ec IIC T4 Gc) |
| INMETRO<br>TÜV Rheinland do Brasil Ltda. | IEC 60079-0 | TÜV 12.1297 X |
| UKEx<br>WAGO GmbH & Co. KG | EN 60079-0 | UKCA_WAGO22UKEX003X_ec |
| UL<br>Underwriters Laboratories Inc. (HAZARDOUS LOCATIONS) | UL 121201 | E198726 |

## Downloads

### Environmental Product Compliance

**Compliance Search**

Environmental Product Compliance 750-494

### Documentation

**Manual**

| | | | |
|---|---|---|---|
| System Manual Series 750/753 | | | |
| Product Manual 3-Phase Power Measurement Module | V 1.5.0<br>05.09.2024 | pdf<br>4332.66 KB | |

**System Description**

| | | |
|---|---|---|
| 750/753 Series I/O-System – General Product Information | pdf<br>953.35 KB | |
| Overview on WAGO-I/O-SYSTEM 750 approvals | pdf<br>770.48 KB | |

### Bid Text

| | | |
|---|---|---|
| 750-494 | 19.02.2019 | xml 6.02 KB |
| 750-494 | 20.10.2017 | doc 30.50 KB |
| ausschreiben.de 750-494 | | |

### Instruction Leaflet

| | | |
|---|---|---|
| CCC Ex (Additional information) | 26.04.2023 | pdf 159.76 KB |

## Application Notes

### Application Note CoDeSys 2.3

| | | |
|---|---|---|
| Application Note for the 750-494 3-Phase Power Measurement Module | 24.01.2014 11.11.2014 | zip 1629.99 KB |

### Application Note e!COCKPIT

| | | |
|---|---|---|
| e!COCKPIT Application Note WagoAppPower-Measurement | 2021-11-08 06.12.2021 | pdf 930.71 KB |

### Application note SIEMENS

| | | |
|---|---|---|
| WagoS7_PowerMeasurement_494 (a500610) | 2.1.1 22.11.2017 | zip 3046.47 KB |
| WagoTIA_PowerMeasurement_494 (a500611) | 1.0.1 22.11.2017 | zip 6461.69 KB |

## CAD/CAE-Data

### CAD data

2D/3D Models 750-494

### CAE data

EPLAN Data Portal 750-494

WSCAD Universe 750-494

ZUKEN Portal 750-494

## Runtime Software

### Firmware

| | | |
|---|---|---|
| 0750-0494, 3-Phasen-Leistungsmessung | V 06 07.06.2022 | zip 179.63 KB |

## Libraries

### Library

| | | |
|---|---|---|
| Bausteinbeschreibung für die PowerMeasurement_494_02.lib | 4.1.2 23.06.2020 | zip 1828.54 KB |


Continued on next page

# 1 Compatible Products

## 1.1 Optional Accessories

### 1.1.1 Current transformer

#### 1.1.1.1 Current transformer terminal block



Item No.: 2007-8873
Compact terminal block; for current and voltage transformers; 6,00 mm²; multicoloured



Item No.: 2007-8875
Compact terminal block; for current transformer circuit; 6,00 mm²; multicoloured

#### 1.1.1.2 Plug-in current transformer



Item No.: 855-1700/032-000
Plug-in current transformer; Primary rated current 32 A; Secondary rated current 320 mA



Item No.: 855-301/100-201
Plug-in current transformer; Primary rated current: 100 A; Secondary rated current: 1 A; Rated power: 2.5 VA; Accuracy class: 1



Item No.: 855-501/1000-1001
Plug-in current transformer; Primary rated current: 1000 A; Secondary rated current: 1 A; Rated power: 10 VA; Accuracy class: 1



Item No.: 855-801/1000-1001
Plug-in current transformer; Primary rated current: 1000 A; Secondary rated current: 1 A; Rated power: 10 VA; Accuracy class: 1



Item No.: 855-301/150-501
Plug-in current transformer; Primary rated current: 150 A; Secondary rated current: 1 A; Rated power: 5 VA; Accuracy class: 1



Item No.: 855-601/1500-501
Plug-in current transformer; Primary rated current: 1500 A; Secondary rated current: 1 A; Rated power: 5 VA; Accuracy class: 1



Item No.: 855-301/200-501
Plug-in current transformer; Primary rated current: 200 A; Secondary rated current: 1 A; Rated power: 5 VA; Accuracy class: 1



Item No.: 855-801/2000-1001
Plug-in current transformer; Primary rated current: 2000 A; Secondary rated current: 1 A; Rated power: 10 VA; Accuracy class: 1



Item No.: 855-301/250-501
Plug-in current transformer; Primary rated current: 250 A; Secondary rated current: 1 A; Rated power: 5 VA; Accuracy class: 1



Item No.: 855-401/250-501
Plug-in current transformer; Primary rated current: 250 A; Secondary rated current: 1 A; Rated power: 5 VA; Accuracy class: 1



Item No.: 855-1001/2500-1001
Plug-in current transformer; Primary rated current: 2500 A; Secondary rated current: 1 A; Rated power: 10 VA; Accuracy class: 1



Item No.: 855-2701/035-001
Plug-in current transformer; Primary rated current: 35 A; Secondary rated current: 1 A; Rated power: 0.2 VA; Accuracy class: 1



Item No.: 855-301/400-1001
Plug-in current transformer; Primary rated current: 400 A; Secondary rated current: 1 A; Rated power: 10 VA; Accuracy class: 1



Item No.: 855-501/400-1001
Plug-in current transformer; Primary rated current: 400 A; Secondary rated current: 1 A; Rated power: 10 VA; Accuracy class: 1



Item No.: 855-401/400-501
Plug-in current transformer; Primary rated current: 400 A; Secondary rated current: 1 A; Rated power: 5 VA; Accuracy class: 1



Item No.: 855-301/050-103
Plug-in current transformer; Primary rated current: 50 A; Secondary rated current: 1 A; Rated power: 1.25 VA; Accuracy class: 3



Item No.: 855-301/060-101
Plug-in current transformer; Primary rated current: 60 A; Secondary rated current: 1 A; Rated power: 1.25 VA; Accuracy class: 1



Item No.: 855-301/600-1001
Plug-in current transformer; Primary rated current: 600 A; Secondary rated current: 1 A; Rated power: 10 VA; Accuracy class: 1



Item No.: 855-401/600-501
Plug-in current transformer; Primary rated current: 600 A; Secondary rated current: 1 A; Rated power: 10 VA; Accuracy class: 1



Item No.: 855-501/600-1001
Plug-in current transformer; Primary rated current: 600 A; Secondary rated current: 1 A; Rated power: 10 VA; Accuracy class: 1



Item No.: 855-2701/064-001
Plug-in current transformer; Primary rated current: 64 A; Secondary rated current: 1 A; Rated power: 0.2 VA; Accuracy class: 1



Item No.: 855-301/075-201
Plug-in current transformer; Primary rated current: 75 A; Secondary rated current: 1 A; Rated power: 2.5 VA; Accuracy class: 1



Item No.: 855-501/800-1001
Plug-in current transformer; Primary rated current: 800 A; Secondary rated current: 1 A; Rated power: 10 VA; Accuracy class: 1

#### 1.1.1.3 Split-core current transformer



Item No.: 855-4001/100-001
Split-core current transformer; Primary rated current: 100 A; Secondary rated current: 1 A; Rated power: 0.2 VA; Accuracy class: 1; Cable length: 3 m



Item No.: 855-3001/100-003
Split-core current transformer; Primary rated current: 100 A; Secondary rated current: 1 A; Rated power: 0.2 VA; Accuracy class: 3; Cable length: 3 m



Item No.: 855-5001/1000-000
Split-core current transformer; Primary rated current: 1000 A; Secondary rated current: 1 A; Rated power: 0.5 VA; Accuracy class: 0.5; Cable length: 5 m



Item No.: 855-5101/1000-000
Split-core current transformer; Primary rated current: 1000 A; Secondary rated current: 1 A; Rated power: 0.5 VA; Accuracy class: 0.5; Cable length: 5 m



Item No.: 855-4001/150-001
Split-core current transformer; Primary rated current: 150 A; Secondary rated current: 1 A; Rated power: 0.2 VA; Accuracy class: 1; Cable length: 3 m



Item No.: 855-4001/200-001
Split-core current transformer; Primary rated current: 200 A; Secondary rated current: 1 A; Rated power: 0.2 VA; Accuracy class: 0.5; Cable length: 3 m



Item No.: 855-3001/200-001
Split-core current transformer; Primary rated current: 200 A; Secondary rated current: 1 A; Rated power: 0.2 VA; Accuracy class: 1; Cable length: 3 m



Item No.: 855-4101/200-001
Split-core current transformer; Primary rated current: 200 A; Secondary rated current: 1 A; Rated power: 0.2 VA; Accuracy class: 1; Cable length: 3 m


Continued on next page

### 1.1.1.3 Split-core current transformer



Item No.: 855-3001/250-001
Split-core current transformer; Primary rated current: 250 A; Secondary rated current: 1 A; Rated power: 0.2 VA; Accuracy class: 1; Cable length: 3 m



Item No.: 855-4101/250-001
Split-core current transformer; Primary rated current: 250 A; Secondary rated current: 1 A; Rated power: 0.2 VA; Accuracy class: 1; Cable length: 3 m



Item No.: 855-5001/250-001
Split-core current transformer; Primary rated current: 250 A; Secondary rated current: 1 A; Rated power: 0.5 VA; Accuracy class: 1; Cable length: 5 m



Item No.: 855-4101/400-001
Split-core current transformer; Primary rated current: 400 A; Secondary rated current: 1 A; Rated power: 0.2 VA; Accuracy class: 1; Cable length: 3 m



Item No.: 855-5001/400-000
Split-core current transformer; Primary rated current: 400 A; Secondary rated current: 1 A; Rated power: 0.5 VA; Accuracy class: 0.5; Cable length: 5 m



Item No.: 855-3001/060-003
Split-core current transformer; Primary rated current: 60 A; Secondary rated current: 1 A; Rated power: 0.2 VA; Accuracy class: 3; Cable length: 3 m



Item No.: 855-5001/600-000
Split-core current transformer; Primary rated current: 600 A; Secondary rated current: 1 A; Rated power: 0.5 VA; Accuracy class: 0.5; Cable length: 5 m

## 1.1.2 DIN-rail

### 1.1.2.1 Mounting accessories



Item No.: 210-196
Aluminum carrier rail; 35 x 8.2 mm; 1.6 mm thick; 2 m long; unslotted; similar to EN 60715; silver-colored



Item No.: 210-198
Copper carrier rail; 35 x 15 mm; 2.3 mm thick; 2 m long; unslotted; according to EN 60715; copper-colored



Item No.: 210-197
Steel carrier rail; 35 x 15 mm; 1.5 mm thick; 2 m long; slotted; similar to EN 60715; silver-colored



Item No.: 210-114
Steel carrier rail; 35 x 15 mm; 1.5 mm thick; 2 m long; unslotted; similar to EN 60715; silver-colored



Item No.: 210-118
Steel carrier rail; 35 x 15 mm; 2.3 mm thick; 2 m long; unslotted; according to EN 60715; silver-colored



Item No.: 210-112
Steel carrier rail; 35 x 7.5 mm; 1 mm thick; 2 m long; slotted; according to EN 60715; "Hole width 25 mm; silver-colored



Item No.: 210-113
Steel carrier rail; 35 x 7.5 mm; 1 mm thick; 2 m long; unslotted; according to EN 60715; silver-colored

## 1.1.3 Marking

### 1.1.3.1 Group marker carrier



Item No.: 750-107
Group marker carrier

### 1.1.3.2 Marker



Item No.: 2009-145/000-006
Mini-WSB Inline; for Smart Printer; 1700 pieces on roll; stretchable 5 - 5.2 mm; plain; snap-on type; blue



Item No.: 2009-145/000-007
Mini-WSB Inline; for Smart Printer; 1700 pieces on roll; stretchable 5 - 5.2 mm; plain; snap-on type; gray



Item No.: 2009-145/000-023
Mini-WSB Inline; for Smart Printer; 1700 pieces on roll; stretchable 5 - 5.2 mm; plain; snap-on type; green



Item No.: 2009-145/000-012
Mini-WSB Inline; for Smart Printer; 1700 pieces on roll; stretchable 5 - 5.2 mm; plain; snap-on type; orange



Item No.: 2009-145/000-005
Mini-WSB Inline; for Smart Printer; 1700 pieces on roll; stretchable 5 - 5.2 mm; plain; snap-on type; red



Item No.: 2009-145/000-024
Mini-WSB Inline; for Smart Printer; 1700 pieces on roll; stretchable 5 - 5.2 mm; plain; snap-on type; violet



Item No.: 2009-145
Mini-WSB Inline; for Smart Printer; 1700 pieces on roll; stretchable 5 - 5.2 mm; plain; snap-on type; white



Item No.: 2009-145/000-002
Mini-WSB Inline; for Smart Printer; 1700 pieces on roll; stretchable 5 - 5.2 mm; plain; snap-on type; yellow



Item No.: 248-501/000-006
Mini-WSB marking card; as card; not stretchable; plain; snap-on type; blue



Item No.: 248-501/000-007
Mini-WSB marking card; as card; not stretchable; plain; snap-on type; gray



Item No.: 248-501/000-023
Mini-WSB marking card; as card; not stretchable; plain; snap-on type; green



Item No.: 248-501/000-017
Mini-WSB marking card; as card; not stretchable; plain; snap-on type; light green



Item No.: 248-501/000-012
Mini-WSB marking card; as card; not stretchable; plain; snap-on type; orange



Item No.: 248-501/000-005
Mini-WSB marking card; as card; not stretchable; plain; snap-on type; red



Item No.: 248-501/000-024
Mini-WSB marking card; as card; not stretchable; plain; snap-on type; violet



Item No.: 248-501
Mini-WSB marking card; as card; not stretchable; plain; snap-on type; white


Continued on next page

### 1.1.3.2 Marker



Item No.: 248-501/000-002
Mini-WSB marking card; as card; not stretchable; plain; snap-on type; yellow

### 1.1.3.3 Marker carrier



Item No.: 750-103
Group marker carrier

## 1.1.4 Potential distribution

### 1.1.4.1 Current and voltage tap



Item No.: 855-951/250-000
Current and voltage tap up to 95 mm²; Primary rated current: 250 A; Secondary rated current: 1 A; Rated power: 0.2 VA; Accuracy class: 0.5; fused

## 1.1.5 Power tap

### 1.1.5.1 Power tap



Item No.: 855-8003
Power tap; with fuse; 10 mm² (8 AWG) - 16 mm² (6 AWG); Phase



Item No.: 855-8001
Power tap; with fuse; 2,5 mm² (12 AWG) - 6 mm² (10 AWG); Phase



Item No.: 855-8004
Power tap; without fuse; 10 mm² (8 AWG) - 16 mm² (6 AWG); N-conductor



Item No.: 855-8002
Power tap; without fuse; 2,5 mm² (12 AWG) - 6 mm² (10 AWG); N-conductor

## 1.1.6 Shield termination

### 1.1.6.1 Shield clamping saddles



Item No.: 790-108
Shield clamping saddle; 11 mm wide; diameter of compatible conductor; 3 … 8 mm



Item No.: 790-208
Shield clamping saddle; 12.4 mm wide; 3 … 8 mm



Item No.: 790-116
Shield clamping saddle; 19 mm wide; diameter of compatible conductor; 7 … 16 mm



Item No.: 790-216
Shield clamping saddle; 21.8 mm wide; 6 … 16 mm



Item No.: 790-124
Shield clamping saddle; 27 mm wide; diameter of compatible conductor; 6 … 24 mm



Item No.: 790-220
Shield clamping saddle; 30 mm wide; 6 … 20 mm



Item No.: 790-140
Shield clamping saddle; diameter of compatible conductor

## 1.1.7 System enclosure

### 1.1.7.1 System enclosure



**Item No.: 850-825**
IP65 enclosure; Aluminium (RAL 7032); WxHxD (160x100x160 mm); 9 x M12, 4 x M20



**Item No.: 850-826**
IP65 enclosure; Aluminium (RAL 7032); WxHxD (240x100x160 mm); 4 x M20, 4 x M16, 14 x M12 cable grip



**Item No.: 850-827**
IP65 enclosure; Aluminium (RAL 7032); WxHxD (320x100x160 mm); 4 x M20, 8 x M16, 17 x M12 cable grip



**Item No.: 850-828**
IP65 enclosure; Aluminium (RAL 7032); WxHxD (480x100x160 mm); 4 x M20, 10 x M16, 35 x M12 cable grip



**Item No.: 850-826/002-000**
IP65 enclosure; Aluminium (RAL 7035); WxHxD (240x100x160 mm); 4 x M20, 4 x M16, 14 x M12 cable grip



**Item No.: 850-827/002-000**
IP65 enclosure; Aluminium (RAL 7035); WxHxD (320x100x160 mm); 4 x M20, 8 x M16, 17 x M12 cable grip



**Item No.: 850-828/002-000**
IP65 enclosure; Aluminium (RAL 7035); WxHxD (480x100x160 mm); 4 x M20, 10 x M16, 35 x M12 cable grip



**Item No.: 850-834**
IP65 enclosure; Polyester (RAL 7032); WxHxD (164x100x164 mm); 9 x M12, 4 x M20



**Item No.: 850-835**
IP65 enclosure; Polyester (RAL 7032); WxHxD (244x100x164 mm); 4 x M20, 4 x M16, 14 x M12 cable grip



**Item No.: 850-836**
IP65 enclosure; Polyester (RAL 7032); WxHxD (324x100x164 mm); 4 x M20, 8 x M16, 17 x M12 cable grip



**Item No.: 850-814/002-000**
IP65 enclosure; Sheet steel (RAL 7035); WxHxD (200x120x200 mm); without flange plate



**Item No.: 850-815/002-000**
IP65 enclosure; Sheet steel (RAL 7035); WxHxD (300x120x200 mm); without flange plate



**Item No.: 850-816/002-000**
IP65 enclosure; Sheet steel (RAL 7035); WxHxD (400x120x200 mm); without flange plate



**Item No.: 850-817/002-000**
IP65 enclosure; Sheet steel (RAL 7035); WxHxD (600x120x200 mm); without flange plate