Data Sheet | Item Number: 750-495/040-002

3-Phase Power Measurement; 690 VAC Rogowski coils; Extreme

https://www.wago.com/750-495/040-002



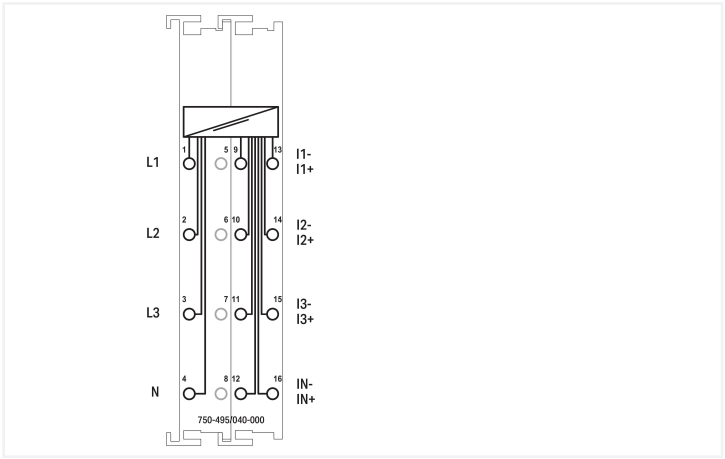

Color: ■ dark gray

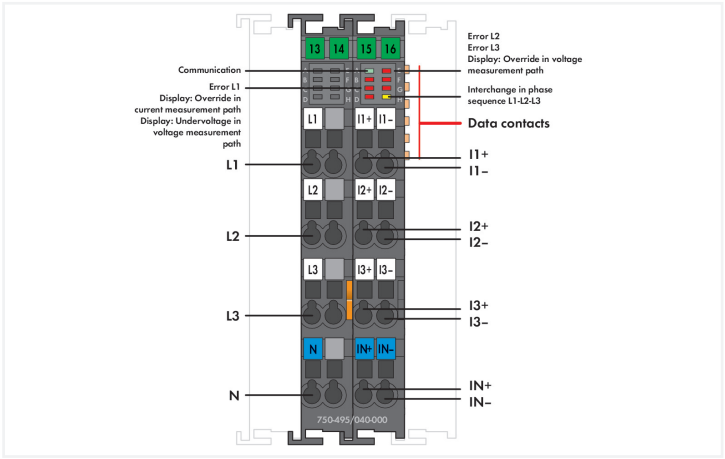

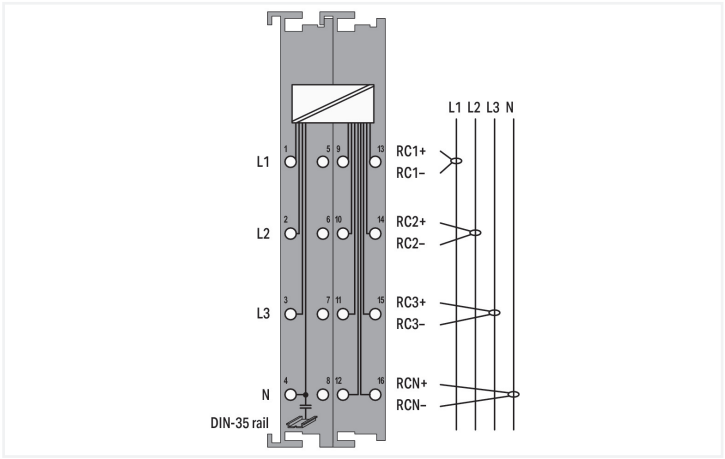

The 750-495 3-Phase Power Measurement Module measures electrical data in a three-phase supply network. The voltage is measured via network connection to L1, L2, L3 and N. The current of the three phases is fed to I1, I2, I3 and IN (two clamping points each +,-) via current transformers or via Rogowski coils for the 750-495/000-002 Module. The module transmits metrics (e.g., reactive/apparent/effective power, energy consumption, power factor, phase angle, frequency, over-/undervoltage) directly into the process image, without requiring high computing power from the controller. Both comprehensive metrics and harmonic analysis up to the 41st harmonic permit extensive network analysis via the fieldbus. These metrics enable the operator to optimize supply to a drive or machine, protecting the system from damage and failure. Insulation failures can be detected and prevented via current measurement performed in the neutral conductor. The four-quadrant display indicates the load type (inductive, capacitive) and whether it is an energy consumer or producer.

The device is ideal for operation in extreme environments thanks to:

- An extended temperature range
- Higher vibration and shock resistance

Technical data

Number of measurement inputs	7 (3 voltage measurement inputs, 4 differential current measurement inputs)
Signal type	Power measurement
Signal form	Sinusoidal signals (taking the cutoff frequency into account)
Resolution [bit]	24 bits
Data width	2 x 128-bit data; 2 x 64-bit control/status
Voltage path input resistance (typ.)	1429 kΩ
Current path input resistance (typ.)	22 kΩ
Reference for measurement error	AC current/voltage
Measurement error (reference temperature)	23 °C
Measurement error, deviation (max.) from the upper-range value	0.5 %
Measurement current (max.)	Secondary voltages of Rogowski coils up to 88 mV
Measurement cycle time	Adjustable for the arithmetic mean value, min./max. values
Frequency range (mains frequency)	50/60 Hz
Frequency range (harmonics analysis)	0 … 3300 Hz
Limit frequency	15.9 kHz
Permissible common mains supply systems	Three-phase, four-wire system: max. 277/480 VAC; Three-phase, three-wire system: max. 600 VAC (UL)
Note on common mains supply systems	U_{LL} up to 690°V is possible under special conditions (see manual).
Upper-range value for the measurement accuracy	400/690 V
Calculated values	Line-to-line voltage, power output, energy, power factors, mains frequency, harmonic analysis (up to the 41st harmonic), THD
Measurement method	True RMS measurement
Supply voltage (system)	5 VDC; via data contacts
Current consumption (system supply)	100 mA
Indicators	LED (A) green: Communication; LED (B-G) red: Error L1, Override in Current Measurement Path (display), Undervoltage in Voltage Measurement Path (display), Error L2, Error L3, Override in Voltage Measurement Path (display); LED (H) yellow: Interchange in Phase Sequence L1-L2-L3

Safety and protection

Measurement category per EN/UL 61010-2-030	CAT III up to 3000 m; CAT II at 3000 m … 5000 m

Test voltage

Test voltage	3.51 kVAC, 50/60 Hz, 1 min.
Rated impulse withstand voltage	System/field side: 5.0 kV (EN 60870-2-1 / Class VW3) 6.4 kV (EN/UL 61010-1)

Insulation coordination per EN/UL 61010-2-201 with N connection

System voltage	≤ 300 V
Note on system voltage	The system voltage corresponds to the line-to-neutral voltage derived from conventional mains power supply systems.
Overvoltage category	III up to 3000°m; II from 3000°m to 5000°m
Insulation type	Reinforced insulation

Insulation coordination per EN/UL 61010-2-201 without N connection

System voltage	≤ 600 V
Note on system voltage	To ensure safe insulation, the module's N connector must not be connected. The system voltage corresponds to the line conductor/neutral conductor voltage, which was derived from standard power supply systems
Overvoltage category	III up to 3000°m; II from 3000°m to 5000°m
Insulation type	Double isolation (basic isolation and supplementary isolation by impedance/current measurement transformer) Safe isolation from the adjacent SELV/PELV modules must be ensured. The product manual contains the types of isolation to adjacent modules in section "Isolation to Adjacent I/O Modules per EN/UL 61010 2-201." Without double or reinforced isolation, the 750-495/040-00x Power Measurement Module must not be placed directly next to SELV/PELV modules. Under such conditions, the 750-616/040-000 Distance Module must be used.

Continued on next page

Connection Data

Connection technology: I/O	12 x CAGE CLAMP®
Connectable conductor materials	Copper
Connection type	Inputs/outputs
Solid conductor	0.25 … 2.5 mm² / 24 … 14 AWG
Fine-stranded conductor	0.25 … 2.5 mm² / 24 … 14 AWG
Strip length	8 … 9 mm / 0.31 … 0.35 inches
Note (conductor cross-section)	Solid conductor: 20 … 14 AWG (UL); Fine-stranded conductor: 20 … 16 AWG (UL) These values refer exclusively to the mechanical connection capacity of the clamping points. When the applications/devices are operated in locations covered by UL, only solid conductor with 20 … 14 AWG and fine-stranded conductor with 20 … 16 AWG are permitted.

Physical data

Width	24 mm / 0.945 inches
Height	100 mm / 3.937 inches
Depth	67.8 mm / 2.669 inches
Depth from upper-edge of DIN-rail	60.6 mm / 2.386 inches

Mechanical data

Mounting type	DIN-35 rail

Material data

Color	dark gray
Housing material	Polycarbonate; polyamide 6.6
Fire load	1.346 MJ
Weight	90 g
Conformity marking	CE

Environmental requirements

Ambient temperature (operation)	-40 … +70 °C
Ambient temperature (storage)	-40 … +85 °C
Ambient temperature (installation)	-20 … +70 °C
Protection type	IP20
Pollution degree	2 per EN 60664-1
Operating altitude	without temperature derating: 0 … 2000 m; with temperature derating: 2000 … 5000 m (0.5 K/100 m); 5000 m (max.)
Mounting position	Horizontal left, horizontal up, vertical top and vertical bottom
Relative humidity (without condensation)	95 %
Relative humidity (with condensation)	Short-term condensation per Class 3K7/IEC EN 60721-3-3 and E-DIN 40046-721-3 (except for wind-driven precipitation, water and ice formation)
Vibration resistance	According to type test for marine classification (ABS, BV, DNV, IACS, LR): acceleration: 5g, IEC 60068-2-6, EN 60870-2-2, IEC 60721-3-1, -3, EN 50155, EN 61373
Shock resistance	per IEC 60068-2-27 (10g/16 ms/half-sine/1,000 shocks; 25g/6 ms/half-sine/1,000 shocks), EN 50155, EN 61373
Corrosion Resistance	Conformal Coating: yes EN/IEC 60068-2-60: Method 4 ISA S71.04: G3 Group A
EMC immunity to interference	per EN 61000-6-1, -2; EN 61131-2; marine applications; EN 50121-3-2; EN 50121-4, -5; EN 60255-26; EN 60870-2-1; EN 61850-3; IEC 61000-6-5; IEEE 1613; VDEW: 1994
EMC emission of interference	per EN 61000-6-3, -4, EN 61131-2, EN 60255-26, marine applications, EN 60870-2-1, EN 61850-3, EN 50121-3-2, EN 50121-4, -5
Exposure to pollutants	per IEC 60068-2-42 and IEC 60068-2-43
Permissible H_2S contaminant concentration at a relative humidity 75 %	10 ppm
Permissible SO_2 contaminant concentration at a relative humidity 75 %	25 ppm

Continued on next page

Commercial data

PU (SPU)	1 pcs
Packaging type	Box
Country of origin	DE
GTIN	4055143353564
Customs tariff number	90308900000

Product Classification

UNSPSC	41113630
eCl@ss 10.0	27-24-26-05
eCl@ss 9.0	27-24-26-05
ETIM 9.0	EC001596
ETIM 10.0	EC001596
ECCN	NO US CLASSIFICATION

Environmental Product Compliance

CAS-No.	1303-86-2 1317-36-8 7439-92-1
REACH Candidate List Substance	Diboron trioxide Lead Lead monoxide
RoHS Compliance Status	Compliant,With Exemption
RoHS Exemption	6(c) 7(a) 7(c)-I 7(c)-II
SCIP notification number (Austria)	eeec456d-099b-4bce-9d21-18f42782f600
SCIP notification number (Belgium)	3a80c892-e3d3-4c4b-9d6d-3eb171c5267e
SCIP notification number (Bulgaria)	10be588a-908c-4d29-ae8d-5e8b3a1bd52e
SCIP notification number (Czech Republic)	b1e21373-9132-4406-a83f-b8d1f9b1f159
SCIP notification number (Denmark)	9f7e2dcf-eaaf-4067-b510-a549f44db64f
SCIP notification number (Finland)	764c4149-9ce9-4bf4-bd3a-691004bcd6ec
SCIP notification number (France)	044269a8-cbab-4c38-b8f1-26314c6a6141
SCIP notification number (Germany)	f3fc0e36-173c-4b63-9f09-c3bb10a11330
SCIP notification number (Hungary)	01868264-0d2d-43fd-bf95-d4bca0ff60e3
SCIP notification number (Italy)	0172e486-29d0-49f6-beb9-abddc6d33519
SCIP notification number (Netherlands)	b193bb56-98fe-4f12-b297-05b43e6aecd7
SCIP notification number (Poland)	2afaf5f3-15fc-4592-adcd-c0ecb1b3e7c0
SCIP notification number (Romania)	ce3b6f14-6e31-4284-9c20-54fec9ad4470
SCIP notification number (Sweden)	8d6251f4-50f6-4b0e-92a5-f3e240b44b1e

Approvals / Certificates

General approvals

Approval	Standard	Certificate Name
EAC GZO Almaty Standart	TP TC 004/2011	EAC CoC 03080
EAC GZO Almaty Standart	TP TC 020/2011	EAC CoC 03083
KC National Radio Research Agency	Article 58-2, Clause 3	MSIP-REM-W43-AIM750

General approvals

UL Underwriters Laboratories Inc. (ORDINARY LOCATIONS)	-	E175199

Continued on next page

Declarations of conformity and manufacturer's declarations

Approval	Standard	Certificate Name
EU-Declaration of Conformity WAGO GmbH & Co. KG	-	-
UK-Declaration of Conformity WAGO GmbH & Co. KG	-	-

Approvals for marine applications

Approval	Standard	Certificate Name
ABS American Bureau of Shipping	-	22-2208829-PDA
LR Lloyds Register	-	LR22276776TA
PRS Polski Rejestr Statków	-	TE/1099/880590/23
RINA RINA Germany GmbH	-	ELE343521XG001

Approvals for hazardous areas

Approval	Standard	Certificate Name
ATEX TUEV Nord Cert GmbH	EN 60079-0	TUEV 17 ATEX 193969X (II 3 G Ex ec IIC T4 Gc)
CCC CNEX	CNCA-C23-01	2020312310000214 (Ex ec IIC T4 Gc)
IECEx TUEV Nord Cert GmbH	IEC 60079-0	IECEx TUN 16.0046X (Ex ec IIC T4 Gc)
UKEx WAGO GmbH & Co. KG	EN 60079-0	UKCA_WA GO22UKEX005X_ec
UL Underwriters Laboratories Inc. (HAZARDOUS LOCATIONS)	UL 121201	E198726

Downloads

Environmental Product Compliance

Compliance Search

Environmental Product Compliance 750-495/040-002

Documentation

Manual

Product Manual 3-Phase Power Measurement Module /XTR	V 1.3.0 06.04.2023	pdf 19361.25 KB	

System Description

Overview on WAGO-I/O-SYSTEM 750 approvals	pdf 770.48 KB	
750 XTR Series I/O-System – General Product Information	pdf 726.09 KB	

Continued on next page

Bid Text

750-495/040-002	19.02.2019	xml 8.99 KB	
750-495/040-002	23.10.2015	doc 36.00 KB	

Instruction Leaflet

CCC Ex (Additional information)	26.04.2023	pdf 144.58 KB	

CAD/CAE-Data

CAD data

2D/3D Models
750-495/040-002

CAE data

EPLAN Data Portal
750-495/040-002

WSCAD Universe
750-495/040-002

ZUKEN Portal
750-495/040-002

Runtime Software

Firmware

0750-0495, 3-Phasen-Leistungsmessung	V 03 07.06.2022	zip 174.07 KB	

Libraries

Library

Function block description PowerMeasurement_495_02.lib	2.1.0 23.01.2017	zip 1579.43 KB	

1 Compatible Products

1.1 Optional Accessories

1.1.1 Current transformer

1.1.1.1 Current transformer terminal block



Item No.: 2007-8874
Compact terminal block; for current and voltage transformers; 6,00 mm²; multicoloured



Item No.: 2007-8877
Compact terminal block; for current transformer circuit; 6,00 mm²; multicoloured

1.1.1.2 Rogowski coil



Item No.: 855-9450/2000-1251
Rogowski coil; Primary rated current 1000 A; Output signal 22.5 mV per kA; Cable length 4.5 m; Feedthrough for measurement conductor 125 mm



Item No.: 855-9450/2000-1751
Rogowski coil; Primary rated current 1000 A; Output signal 22.5 mV per kA; Cable length 4.5 m; Feedthrough for measurement conductor 175 mm



Item No.: 855-9450/2000-701
Rogowski coil; Primary rated current 1000 A; Output signal 22.5 mV per kA; Cable length 4.5 m; Feedthrough for measurement conductor 70 mm



Item No.: 855-9150/2000-1251
Rogowski coil; Primary rated current 1000 A; Output signal 22.5 mV per kA; Cable length: 1.5 m; Feedthrough for measurement conductor 125 mm

Continued on next page

1.1.1.2 Rogowski coil



Item No.: 855-9150/2000-1751
Rogowski coil; Primary rated current 1000 A; Output signal 22.5 mV per kA; Cable length: 1.5 m; Feedthrough for measurement conductor 175 mm



Item No.: 855-9150/2000-701
Rogowski coil; Primary rated current 1000 A; Output signal 22.5 mV per kA; Cable length: 1.5 m; Feedthrough for measurement conductor 70 mm

1.1.2 DIN-rail

1.1.2.1 Mounting accessories



Item No.: 210-196
Aluminum carrier rail; 35 x 8.2 mm; 1.6 mm thick; 2 m long; unslotted; similar to EN 60715; silver-colored



Item No.: 210-198
Copper carrier rail; 35 x 15 mm; 2.3 mm thick; 2 m long; unslotted; according to EN 60715; copper-colored



Item No.: 210-197
Steel carrier rail; 35 x 15 mm; 1.5 mm thick; 2 m long; slotted; similar to EN 60715; silver-colored



Item No.: 210-114
Steel carrier rail; 35 x 15 mm; 1.5 mm thick; 2 m long; unslotted; similar to EN 60715; silver-colored



Item No.: 210-118
Steel carrier rail; 35 x 15 mm; 2.3 mm thick; 2 m long; unslotted; according to EN 60715; silver-colored



Item No.: 210-112
Steel carrier rail; 35 x 7.5 mm; 1 mm thick; 2 m long; slotted; according to EN 60715; "Hole width 25 mm; silver-colored



Item No.: 210-113
Steel carrier rail; 35 x 7.5 mm; 1 mm thick; 2 m long; unslotted; according to EN 60715; silver-colored

1.1.3 Marking

1.1.3.1 Group marker carrier



Item No.: 750-107
Group marker carrier

1.1.3.2 Marker



Item No.: 2009-145/000-006
Mini-WSB Inline; for Smart Printer; 1700 pieces on roll; stretchable 5 - 5.2 mm; plain; snap-on type; blue



Item No.: 2009-145/000-007
Mini-WSB Inline; for Smart Printer; 1700 pieces on roll; stretchable 5 - 5.2 mm; plain; snap-on type; gray



Item No.: 2009-145/000-023
Mini-WSB Inline; for Smart Printer; 1700 pieces on roll; stretchable 5 - 5.2 mm; plain; snap-on type; green



Item No.: 2009-145/000-012
Mini-WSB Inline; for Smart Printer; 1700 pieces on roll; stretchable 5 - 5.2 mm; plain; snap-on type; orange



Item No.: 2009-145/000-005
Mini-WSB Inline; for Smart Printer; 1700 pieces on roll; stretchable 5 - 5.2 mm; plain; snap-on type; red



Item No.: 2009-145/000-024
Mini-WSB Inline; for Smart Printer; 1700 pieces on roll; stretchable 5 - 5.2 mm; plain; snap-on type; violet



Item No.: 2009-145
Mini-WSB Inline; for Smart Printer; 1700 pieces on roll; stretchable 5 - 5.2 mm; plain; snap-on type; white



Item No.: 2009-145/000-002
Mini-WSB Inline; for Smart Printer; 1700 pieces on roll; stretchable 5 - 5.2 mm; plain; snap-on type; yellow



Item No.: 248-501/000-006
Mini-WSB marking card; as card; not stretchable; plain; snap-on type; blue



Item No.: 248-501/000-007
Mini-WSB marking card; as card; not stretchable; plain; snap-on type; gray



Item No.: 248-501/000-023
Mini-WSB marking card; as card; not stretchable; plain; snap-on type; green



Item No.: 248-501/000-017
Mini-WSB marking card; as card; not stretchable; plain; snap-on type; light green



Item No.: 248-501/000-012
Mini-WSB marking card; as card; not stretchable; plain; snap-on type; orange



Item No.: 248-501/000-005
Mini-WSB marking card; as card; not stretchable; plain; snap-on type; red



Item No.: 248-501/000-024
Mini-WSB marking card; as card; not stretchable; plain; snap-on type; violet



Item No.: 248-501
Mini-WSB marking card; as card; not stretchable; plain; snap-on type; white



Item No.: 248-501/000-002
Mini-WSB marking card; as card; not stretchable; plain; snap-on type; yellow

Continued on next page

1.1.3.3 Marker carrier



Item No.: 750-103
Group marker carrier

1.1.4 Power tap

1.1.4.1 Power tap



Item No.: 855-8003
Power tap; with fuse; 10 mm² (8 AWG) - 16 mm² (6 AWG); Phase



Item No.: 855-8001
Power tap; with fuse; 2,5 mm² (12 AWG) - 6 mm² (10 AWG); Phase



Item No.: 855-8004
Power tap; without fuse; 10 mm² (8 AWG) - 16 mm² (6 AWG); N-conductor



Item No.: 855-8002
Power tap; without fuse; 2,5 mm² (12 AWG) - 6 mm² (10 AWG); N-conductor

1.1.5 Shield termination

1.1.5.1 Shield clamping saddles



Item No.: 790-108
Shield clamping saddle; 11 mm wide; diameter of compatible conductor; 3 … 8 mm



Item No.: 790-208
Shield clamping saddle; 12.4 mm wide; 3 … 8 mm



Item No.: 790-116
Shield clamping saddle; 19 mm wide; diameter of compatible conductor; 7 … 16 mm



Item No.: 790-216
Shield clamping saddle; 21.8 mm wide; 6 … 16 mm



Item No.: 790-124
Shield clamping saddle; 27 mm wide; diameter of compatible conductor; 6 … 24 mm



Item No.: 790-220
Shield clamping saddle; 30 mm wide; 6 … 20 mm



Item No.: 790-140
Shield clamping saddle; diameter of compatible conductor

1.1.6 System enclosure

1.1.6.1 System enclosure



Item No.: 850-825
IP65 enclosure; Aluminium (RAL 7032); WxHxD (160x100x160 mm); 9 x M12, 4 x M20



Item No.: 850-826
IP65 enclosure; Aluminium (RAL 7032); WxHxD (240x100x160 mm); 4 x M20, 4 x M16, 14 x M12 cable grip



Item No.: 850-827
IP65 enclosure; Aluminium (RAL 7032); WxHxD (320x100x160 mm); 4 x M20, 8 x M16, 17 x M12 cable grip



Item No.: 850-828
IP65 enclosure; Aluminium (RAL 7032); WxHxD (480x100x160 mm); 4 x M20, 10 x M16, 35 x M12 cable grip



Item No.: 850-826/002-000
IP65 enclosure; Aluminium (RAL 7035); WxHxD (240x100x160 mm); 4 x M20, 4 x M16, 14 x M12 cable grip



Item No.: 850-827/002-000
IP65 enclosure; Aluminium (RAL 7035); WxHxD (320x100x160 mm); 4 x M20, 8 x M16, 17 x M12 cable grip



Item No.: 850-828/002-000
IP65 enclosure; Aluminium (RAL 7035); WxHxD (480x100x160 mm); 4 x M20, 10 x M16, 35 x M12 cable grip



Item No.: 850-834
IP65 enclosure; Polyester (RAL 7032); WxHxD (164x100x164 mm); 9 x M12, 4 x M20



Item No.: 850-835
IP65 enclosure; Polyester (RAL 7032); WxHxD (244x100x164 mm); 4 x M20, 4 x M16, 14 x M12 cable grip



Item No.: 850-836
IP65 enclosure; Polyester (RAL 7032); WxHxD (324x100x164 mm); 4 x M20, 8 x M16, 17 x M12 cable grip



Item No.: 850-814/002-000
IP65 enclosure; Sheet steel (RAL 7035); WxHxD (200x120x200 mm); without flange plate



Item No.: 850-815/002-000
IP65 enclosure; Sheet steel (RAL 7035); WxHxD (300x120x200 mm); without flange plate



Item No.: 850-816/002-000
IP65 enclosure; Sheet steel (RAL 7035); WxHxD (400x120x200 mm); without flange plate



Item No.: 850-817/002-000
IP65 enclosure; Sheet steel (RAL 7035); WxHxD (600x120x200 mm); without flange plate