Data Sheet | Item Number: 750-517/040-000

2-channel relay output; AC 250 V; 1 A; 2 changeover contacts; Extreme

https://www.wago.com/750-517/040-000

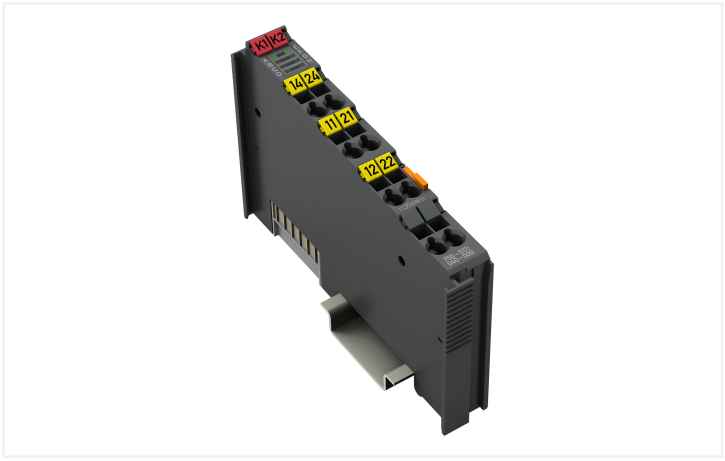

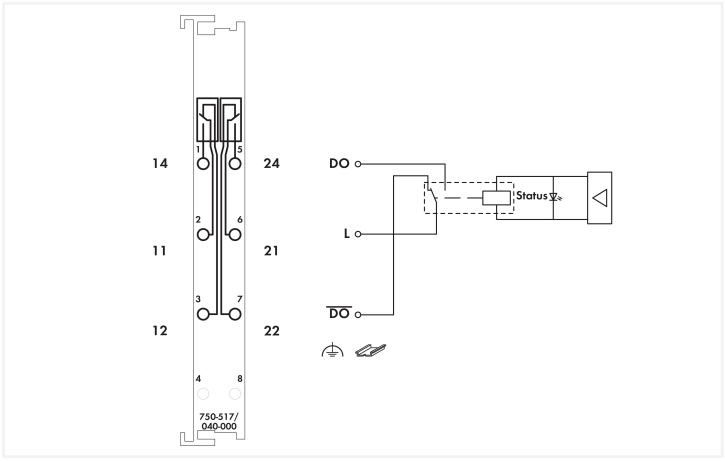

Color: ■ dark gray

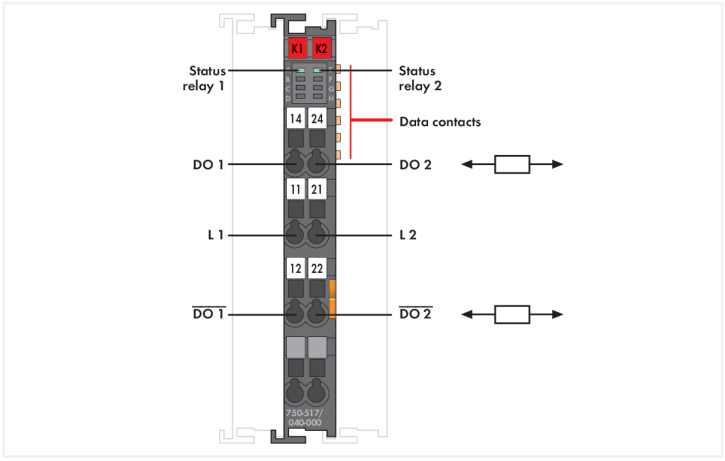

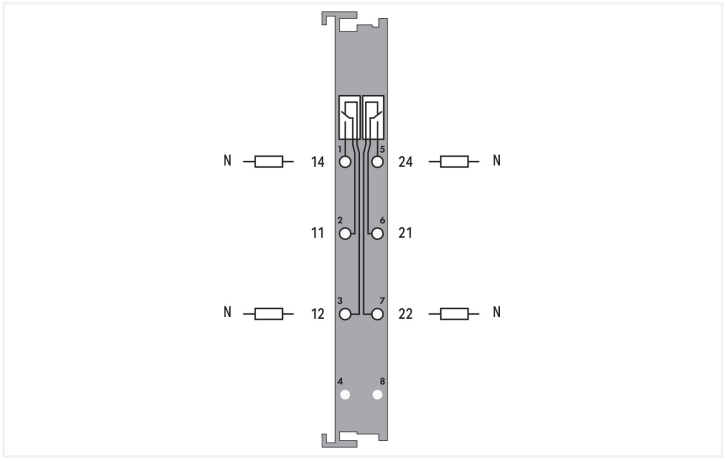

This digital output module transmits control signals from the automation device to the connected actuators.
The internal system voltage triggers the relay.
The NO contacts are electrically isolated.
The state of the relay is indicated by a LED.

The device is ideal for operation in extreme environments thanks to:

- An extended temperature range
- Greater immunity to impulse voltages and electromagnetic interference
- Higher vibration and shock resistance

Technical data	
Number of digital outputs	2
Total number of channels (module)	2
Signal type	Digital
Actuator connection	2 x (1-wire)
Output circuit design	2 changeover contacts Relay
Output characteristic	potential-free
Pull-in time (max.)	8 ms
Drop-out time (max.)	4 ms
Switching frequency (max.)	0.1 Hz; Nominal load

Technical data

Switching voltage (max.)	250 VAC, 300 VDC
Switching current (max.)	1 A
Switching current (note)	1 A at 250 VAC and 40 VDC; 0.15 A at 300 VDC
Switching voltage (min.)	12 V
Switching current (min.)	100 mA
Electrical switching operations (min.) (at max. resistive load)	1 x 10^6 switching operations
Mechanical switching operations (min.) (at max. resistive load)	5 x 10^6 switching operations
Output data width (internal) max.	2 bits
Supply voltage (system)	5 VDC; via data contacts
Current consumption (system supply)	90 mA
Dielectric strength	2.5 kVAC / 3.5 kVDC; per EN 60870-2-1
Indicators	LED (A, E) green: Status relay 1, relay 2
Rated impulse withstand voltage	5.0 kV (EN 60870-2-1 / Class VW3); 4.0 kV (UL 508); 6.4 kV (EN 61010-1)
Overvoltage category	Nominal voltage 230 V: III (EN 61010-1 / up to 2.000 m); II (EN 61010-1 / up to 5.000 m)

Connection Data

Connection technology: I/O	6 x CAGE CLAMP® (outputs)
Connectable conductor materials	Copper
Connection type	Output
Solid conductor	0.25 … 2.5 mm² / 24 … 14 AWG
Fine-stranded conductor	0.25 … 2.5 mm² / 24 … 14 AWG
Strip length	8 … 9 mm / 0.31 … 0.35 inches

Physical data

Width	12 mm / 0.472 inches
Height	100 mm / 3.937 inches
Depth	67.8 mm / 2.669 inches
Depth from upper-edge of DIN-rail	60.6 mm / 2.386 inches

Mechanical data

Mounting type	DIN-35 rail

Material data

Color	dark gray
Housing material	Polycarbonate; polyamide 6.6
Fire load	0.702 MJ
Weight	53.5 g
Conformity marking	CE

Environmental requirements

Ambient temperature (operation)	-40 … +70 °C
Ambient temperature (storage)	-40 … +85 °C
Ambient temperature (installation)	-20 … +70 °C
Protection type	IP20
Pollution degree	2 (EN 61010-1)
Operating altitude	without temperature derating: 0 … 2000 m; with temperature derating: 2000 … 5000 m (0.5 K/100 m); 5000 m (max.)
Mounting position	Horizontal left, horizontal up, vertical top and vertical bottom
Relative humidity (without condensation)	95 %
Relative humidity (with condensation)	Short-term condensation per Class 3K7/IEC EN 60721-3-3 and E-DIN 40046-721-3 (except for wind-driven precipitation, water and ice formation)

Continued on next page

Environmental requirements

Vibration resistance	According to type test for marine classification (ABS, BV, DNV, IACS, LR): acceleration: 5g, IEC 60068-2-6, EN 60870-2-2, IEC 60721-3-1, -3, EN 50155, EN 61373
Shock resistance	per IEC 60068-2-27 (10g/16 ms/half-sine/1,000 shocks; 25g/6 ms/half-sine/1,000 shocks), EN 50155, EN 61373
Corrosion Resistance	Conformal Coating: yes EN/IEC 60068-2-60: Method 4 ISA S71.04: G3 Group A
EMC immunity to interference	per EN 61000-6-1, -2; EN 61131-2; marine applications; EN 50121-3-2; EN 50121-4, -5; EN 60255-26; EN 60870-2-1; EN 61850-3; IEC 61000-6-5; IEEE 1613; VDEW: 1994
EMC emission of interference	per EN 61000-6-3, -4, EN 61131-2, EN 60255-26, marine applications, EN 60870-2-1, EN 61850-3, EN 50121-3-2, EN 50121-4, -5
Exposure to pollutants	per IEC 60068-2-42 and IEC 60068-2-43
Permissible H_2S contaminant concentration at a relative humidity 75 %	10 ppm
Permissible SO_2 contaminant concentration at a relative humidity 75 %	25 ppm

Commercial data

Product Group	15 (I/O System)
PU (SPU)	1 pcs
Packaging type	Box
Country of origin	DE
GTIN	4050821460244
Customs tariff number	85371098990

Product Classification

UNSPSC	32101517
eCl@ss 10.0	27-24-26-04
eCl@ss 9.0	27-24-26-04
ETIM 9.0	EC001599
ETIM 10.0	EC001599
ECCN	NO US CLASSIFICATION

Environmental Product Compliance

CAS-No.	1303-86-2 1317-36-8 7439-92-1
REACH Candidate List Substance	Diboron trioxide Lead Lead monoxide
RoHS Compliance Status	Compliant,With Exemption
RoHS Exemption	6(c) 7(a) 7(c)-I 7(c)-II
SCIP notification number (Bulgaria)	e2594b6e-0dd6-4624-8777-f51f54a97472
SCIP notification number (Czech Republic)	c166b752-c47d-48f1-8016-a9e8d653bc9c

Continued on next page

Approvals / Certificates

General approvals

Approval	Standard	Certificate Name
EAC GZO Almaty Standart	TP TC 004/2011	EAC CoC 03080
EAC GZO Almaty Standart	TP TC 020/2011	EAC CoC 03083
KC National Radio Research Agency	Article 58-2, Clause 3	MSIP-REM-W43-DOM750
UL Underwriters Laboratories Inc. (ORDINARY LOCATIONS)	UL 508	E175199

Declarations of conformity and manufacturer's declarations

Approval	Standard	Certificate Name
EU-Declaration of Conformity WAGO GmbH & Co. KG	-	-
UK-Declaration of Conformity WAGO GmbH & Co. KG	-	-

Approvals for marine applications

Approval	Standard	Certificate Name
ABS American Bureau of Shipping	-	22-2208829-PDA
DNV DNV GL SE	-	TAA00000Y7
LR Lloyds Register	-	LR22276776TA
PRS Polski Rejestr Statków	-	TE/1099/880590/23

Approvals for hazardous areas

Approval	Standard	Certificate Name
ATEX TUEV Nord Cert GmbH	EN 60079-0	TUEV 17 ATEX 193969X (II 3 G Ex ec IIC T4 Gc)
CCC CNEX	CNCA-C23-01	2020312310000214 (Ex ec nC IIC T4 Gc)
IECEx TUEV Nord Cert GmbH	IEC 60079-0	IECEx TUN 16.0046X (Ex ec IIC T4 Gc)
UKEx WAGO GmbH & Co. KG	EN 60079-0	UKCA_WAGO22UKEX005X_ec nC
UL Underwriters Laboratories Inc. (HAZARDOUS LOCATIONS)	UL 121201	E198726

Downloads

Environmental Product Compliance

Compliance Search

Environmental Product Compliance
750-517/040-000

Documentation

Manual

Product Manual 2DO 230 V AC 1.0 A, Relay 2CO, potential-free /XTR	V 1.3.1 29.08.2022	pdf 2506.43 KB

System Description

Overview on WAGO-I/O-SYSTEM 750 approvals	pdf 770.48 KB
750 XTR Series I/O-System – General Product Information	pdf 726.09 KB

Bid Text			
750-517/040-000	19.02.2019	xml 6.24 KB	⬇
750-517/040-000	28.10.2015	doc 27.00 KB	⬇

Instruction Leaflet			
CCC Ex (Additional information)	26.04.2023	pdf 144.58 KB	⬇
CCC Ex (Additional information)	26.04.2023	pdf 143.50 KB	⬇

CAD/CAE-Data

CAD data	CAE data
2D/3D Models 750-517/040-000 ⬇	EPLAN Data Portal 750-517/040-000 ⬇
	WSCAD Universe 750-517/040-000 ⬇
	ZUKEN Portal 750-517/040-000 ⬇

1 Compatible Products

1.1 Optional Accessories

1.1.1 DIN-rail

1.1.1.1 Mounting accessories



Item No.: 210-196
Aluminum carrier rail; 35 x 8.2 mm; 1.6 mm thick; 2 m long; unslotted; similar to EN 60715; silver-colored



Item No.: 210-198
Copper carrier rail; 35 x 15 mm; 2.3 mm thick; 2 m long; unslotted; according to EN 60715; copper-colored



Item No.: 210-197
Steel carrier rail; 35 x 15 mm; 1.5 mm thick; 2 m long; slotted; similar to EN 60715; silver-colored



Item No.: 210-114
Steel carrier rail; 35 x 15 mm; 1.5 mm thick; 2 m long; unslotted; similar to EN 60715; silver-colored



Item No.: 210-118
Steel carrier rail; 35 x 15 mm; 2.3 mm thick; 2 m long; unslotted; according to EN 60715; silver-colored



Item No.: 210-115
Steel carrier rail; 35 x 7.5 mm; 1 mm thick; 2 m long; slotted; according to EN 60715; "Hole width 18 mm; silver-colored



Item No.: 210-112
Steel carrier rail; 35 x 7.5 mm; 1 mm thick; 2 m long; slotted; according to EN 60715; "Hole width 25 mm; silver-colored



Item No.: 210-113
Steel carrier rail; 35 x 7.5 mm; 1 mm thick; 2 m long; unslotted; according to EN 60715; silver-colored

1.1.2 Marking

1.1.2.1 Group marker carrier



Item No.: 750-107
Group marker carrier

1.1.2.2 Marker

Item No.: 2009-145/000-006
Mini-WSB Inline; for Smart Printer; 1700 pieces on roll; stretchable 5 - 5.2 mm; plain; snap-on type; blue

Item No.: 2009-145/000-007
Mini-WSB Inline; for Smart Printer; 1700 pieces on roll; stretchable 5 - 5.2 mm; plain; snap-on type; gray

Item No.: 2009-145/000-023
Mini-WSB Inline; for Smart Printer; 1700 pieces on roll; stretchable 5 - 5.2 mm; plain; snap-on type; green

Item No.: 2009-145/000-012
Mini-WSB Inline; for Smart Printer; 1700 pieces on roll; stretchable 5 - 5.2 mm; plain; snap-on type; orange

Item No.: 2009-145/000-005
Mini-WSB Inline; for Smart Printer; 1700 pieces on roll; stretchable 5 - 5.2 mm; plain; snap-on type; red

Item No.: 2009-145/000-024
Mini-WSB Inline; for Smart Printer; 1700 pieces on roll; stretchable 5 - 5.2 mm; plain; snap-on type; violet

Item No.: 2009-145
Mini-WSB Inline; for Smart Printer; 1700 pieces on roll; stretchable 5 - 5.2 mm; plain; snap-on type; white

Item No.: 2009-145/000-002
Mini-WSB Inline; for Smart Printer; 1700 pieces on roll; stretchable 5 - 5.2 mm; plain; snap-on type; yellow

Continued on next page

1.1.2.2 Marker



Item No.: 248-501/000-006
Mini-WSB marking card; as card; not stretchable; plain; snap-on type; blue



Item No.: 248-501/000-007
Mini-WSB marking card; as card; not stretchable; plain; snap-on type; gray



Item No.: 248-501/000-023
Mini-WSB marking card; as card; not stretchable; plain; snap-on type; green



Item No.: 248-501/000-017
Mini-WSB marking card; as card; not stretchable; plain; snap-on type; light green



Item No.: 248-501/000-012
Mini-WSB marking card; as card; not stretchable; plain; snap-on type; orange



Item No.: 248-501/000-005
Mini-WSB marking card; as card; not stretchable; plain; snap-on type; red



Item No.: 248-501/000-024
Mini-WSB marking card; as card; not stretchable; plain; snap-on type; violet



Item No.: 248-501
Mini-WSB marking card; as card; not stretchable; plain; snap-on type; white



Item No.: 248-501/000-002
Mini-WSB marking card; as card; not stretchable; plain; snap-on type; yellow

1.1.2.3 Marker carrier



Item No.: 750-103
Group marker carrier

1.1.3 Shield termination

1.1.3.1 Shield clamping saddles



Item No.: 790-108
Shield clamping saddle; 11 mm wide; diameter of compatible conductor; 3 … 8 mm



Item No.: 790-208
Shield clamping saddle; 12.4 mm wide; 3 … 8 mm



Item No.: 790-116
Shield clamping saddle; 19 mm wide; diameter of compatible conductor; 7 … 16 mm



Item No.: 790-216
Shield clamping saddle; 21.8 mm wide; 6 … 16 mm



Item No.: 790-124
Shield clamping saddle; 27 mm wide; diameter of compatible conductor; 6 … 24 mm



Item No.: 790-220
Shield clamping saddle; 30 mm wide; 6 … 20 mm



Item No.: 790-140
Shield clamping saddle; diameter of compatible conductor

1.1.4 System enclosure

1.1.4.1 System enclosure



Item No.: 850-825
IP65 enclosure; Aluminium (RAL 7032); WxHxD (160x100x160 mm); 9 x M12, 4 x M20



Item No.: 850-826
IP65 enclosure; Aluminium (RAL 7032); WxHxD (240x100x160 mm); 4 x M20, 4 x M16, 14 x M12 cable grip



Item No.: 850-827
IP65 enclosure; Aluminium (RAL 7032); WxHxD (320x100x160 mm); 4 x M20, 8 x M16, 17 x M12 cable grip



Item No.: 850-828
IP65 enclosure; Aluminium (RAL 7032); WxHxD (480x100x160 mm); 4 x M20, 10 x M16, 35 x M12 cable grip



Item No.: 850-826/002-000
IP65 enclosure; Aluminium (RAL 7035); WxHxD (240x100x160 mm); 4 x M20, 4 x M16, 14 x M12 cable grip



Item No.: 850-827/002-000
IP65 enclosure; Aluminium (RAL 7035); WxHxD (320x100x160 mm); 4 x M20, 8 x M16, 17 x M12 cable grip



Item No.: 850-828/002-000
IP65 enclosure; Aluminium (RAL 7035); WxHxD (480x100x160 mm); 4 x M20, 10 x M16, 35 x M12 cable grip



Item No.: 850-834
IP65 enclosure; Polyester (RAL 7032); WxHxD (164x100x164 mm); 9 x M12, 4 x M20



Item No.: 850-835
IP65 enclosure; Polyester (RAL 7032); WxHxD (244x100x164 mm); 4 x M20, 4 x M16, 14 x M12 cable grip



Item No.: 850-836
IP65 enclosure; Polyester (RAL 7032); WxHxD (324x100x164 mm); 4 x M20, 8 x M16, 17 x M12 cable grip



Item No.: 850-814/002-000
IP65 enclosure; Sheet steel (RAL 7035); WxHxD (200x120x200 mm); without flange plate



Item No.: 850-815/002-000
IP65 enclosure; Sheet steel (RAL 7035); WxHxD (300x120x200 mm); without flange plate

Continued on next page

1.1.4.1 System enclosure



Item No.: 850-816/002-000
IP65 enclosure; Sheet steel (RAL 7035); WxHxD (400x120x200 mm); without flange plate



Item No.: 850-817/002-000
IP65 enclosure; Sheet steel (RAL 7035); WxHxD (600x120x200 mm); without flange plate