Data Sheet | Item Number: 750-532

4-channel digital output; 24 VDC; 0.5 A; Diagnostics

https://www.wago.com/750-532

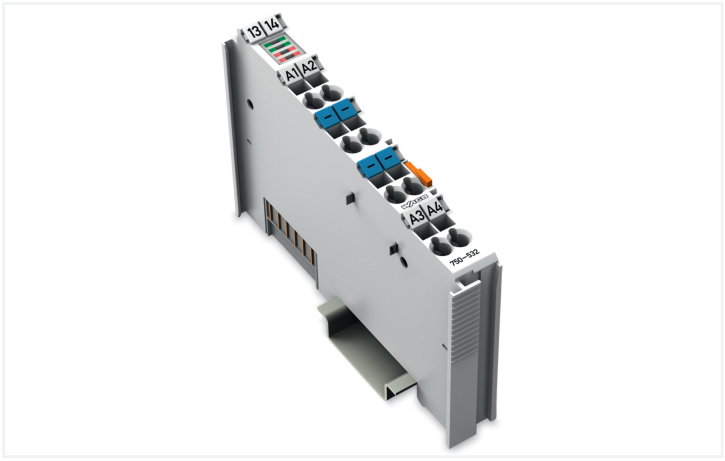

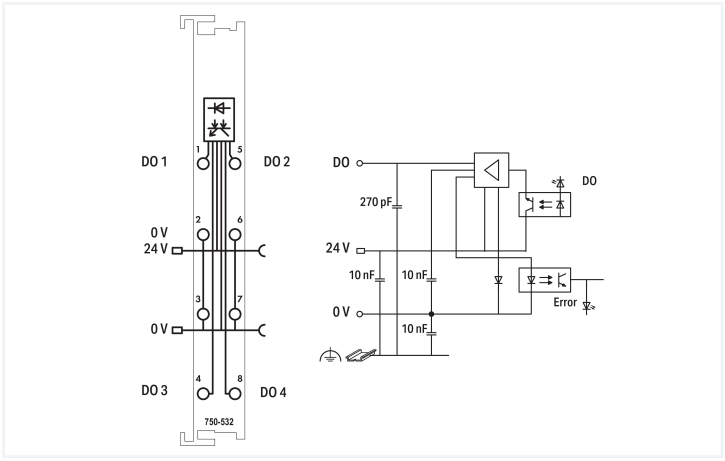

Color: light gray

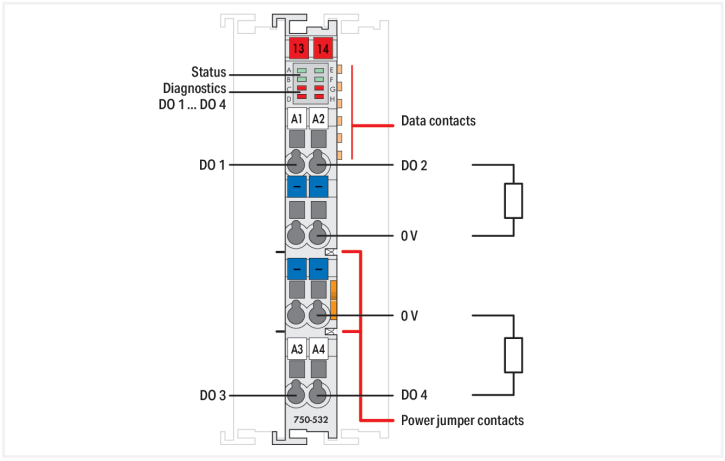

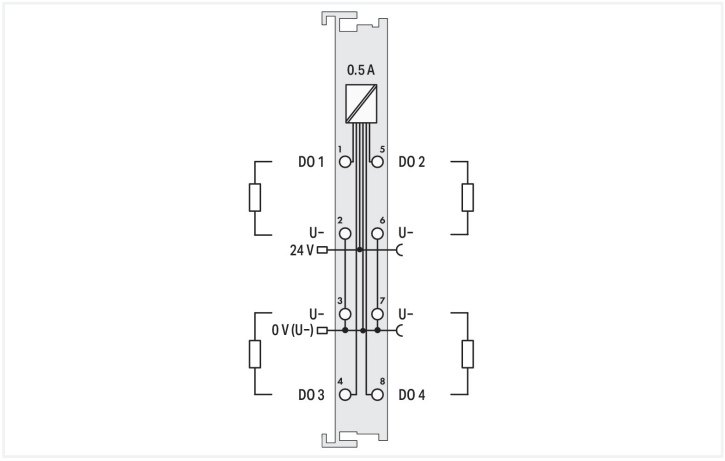

This digital output module transmits control signals from the automation device to the connected actuators.
All outputs are short-circuit-protected.
The module detects the following errors: overload, short circuit and wire break.
The status is transmitted to the fieldbus coupler and indicated by LEDs.
Field and system levels are electrically isolated.

Technical data	
Number of digital outputs	4
Total number of channels (module)	4
Signal type	Digital
Signal type (voltage)	24 VDC
Actuator connection	4 x (2-wire)
Output characteristic	high-side switching
Output current per channel	0.5 A
Output current	short-circuit-protected
Load type	Resistive, inductive, lamp load
Reverse voltage protection	Yes
Open-circuit detection	0.9 mA
Short-circuit limitation (typ.) PWM	6 A
Switching frequency (max.)	2 kHz

Technical data

Inductive load switch-off energy dissipation (max.)	0.125 J
Diagnostics	Open circuit, short circuit, overload
Input data width (internal) max.	4 bits
Output data width (internal) max.	4 bits
Supply voltage (system)	5 VDC; via data contacts
Current consumption (system supply)	10 mA
Supply voltage (field)	24 VDC (-25 … +30 %); via power jumper contacts (power supply via blade contact; transmission (field side supply voltage only) via spring contact)
Current consumption, field supply (module with no external load)	13 mA
Isolation	500 V system/field
Indicators	LED (A, B, E, F) green: Status DO 1 … DO 4; LED (C, D, G, H) red: Diagnostics DO 1 … DO 4
Number of incoming power jumper contacts	2
Number of outgoing power jumper contacts	2
Current carrying capacity (power jumper contacts)	10 A

Connection Data

Connection technology: I/O	8 x CAGE CLAMP® (outputs)
Connectable conductor materials	Copper
Connection type	Output
Solid conductor	0.08 … 2.5 mm² / 28 … 14 AWG
Fine-stranded conductor	0.08 … 2.5 mm² / 28 … 14 AWG
Strip length	8 … 9 mm / 0.31 … 0.35 inches

Physical data

Width	12 mm / 0.472 inches
Height	100 mm / 3.937 inches
Depth	67.8 mm / 2.669 inches
Depth from upper-edge of DIN-rail	60.6 mm / 2.386 inches

Mechanical data

Mounting type	DIN-35 rail
Pluggable connector	fixed

Material data

Color	light gray
Housing material	Polycarbonate; polyamide 6.6
Fire load	0.877 MJ
Weight	48 g
Conformity marking	CE

Environmental requirements

Ambient temperature (operation)	0 … +55 °C
Ambient temperature (storage)	-40 … +85 °C
Protection type	IP20
Pollution degree	2 per IEC 61131-2
Operating altitude	0 … 2000 m / 0 … 6562 ft
Mounting position	Horizontal left, horizontal right, horizontal top, horizontal bottom, vertical top and vertical bottom
Relative humidity (without condensation)	95 %
Vibration resistance	4g per IEC 60068-2-6
Shock resistance	15g per IEC 60068-2-27
EMC immunity to interference	per EN 61000-6-2, marine applications

Continued on next page

Environmental requirements

EMC emission of interference	per EN 61000-6-3, marine applications
Exposure to pollutants	per IEC 60068-2-42 and IEC 60068-2-43
Permissible H_2S contaminant concentration at a relative humidity 75 %	10 ppm
Permissible SO_2 contaminant concentration at a relative humidity 75 %	25 ppm

Commercial data

Product Group	15 (I/O System)
PU (SPU)	1 pcs
Packaging type	Box
Country of origin	DE
GTIN	4050821419068
Customs tariff number	85371098990

Product Classification

UNSPSC	32151705
eCl@ss 10.0	27-24-26-04
eCl@ss 9.0	27-24-26-04
ETIM 9.0	EC001599
ETIM 10.0	EC001599
ECCN	NO US CLASSIFICATION

Environmental Product Compliance

CAS-No.	1303-86-2 1317-36-8 7439-92-1 79-94-7
REACH Candidate List Substance	2,2',6,6'-tetrabromo-4,4'-isopropylidenediphenol Diboron trioxide Lead Lead monoxide
RoHS Compliance Status	Compliant,With Exemption
RoHS Exemption	6(c) 7(a) 7(c)-I 7(c)-II
SCIP notification number (Austria)	9185fea8-c598-48a2-90b5-629b97d1b218
SCIP notification number (Belgium)	113847ff-f926-4c61-9f88-105fb2d533e5
SCIP notification number (Bulgaria)	a864af2f-72ed-45de-9a32-07a0c8466d0c
SCIP notification number (Czech Republic)	926f6984-f766-45f9-af56-7d5cadd8c964
SCIP notification number (Denmark)	a2dc36b4-2631-4e92-a199-0a44fec5f87f
SCIP notification number (Finland)	b597940b-48d9-42b4-9de3-3eee64023e3a
SCIP notification number (France)	6415f4a0-afbc-494c-99e6-6d09c00e8b81
SCIP notification number (Germany)	4f42ad8a-1a02-4354-9ec9-268f3919f6d2
SCIP notification number (Hungary)	96e67100-e173-4051-acaa-bea2e2b63471
SCIP notification number (Italy)	42322d32-1e5e-4a98-8a30-ae4b0bf52591
SCIP notification number (Netherlands)	a50b0232-23b8-4078-8ab4-86cf36175da0
SCIP notification number (Poland)	04050efb-26a7-47e2-b3fb-b54ad241ef1c
SCIP notification number (Romania)	66304e17-b91a-4eb2-b2e1-f19f8971464d
SCIP notification number (Sweden)	a6ce1aa3-3fd3-4541-bf90-028291fb31bf

Continued on next page

Approvals / Certificates

General approvals

Approval	Standard	Certificate Name
EAC GZO Almaty Standart	TP TC 020/2011	EAC CoC 03083
KC National Radio Research Agency	Article 58-2, Clause 3	MSIP-REM-W43-DOM750
UL Underwriters Laboratories Inc. (ORDINARY LOCATIONS)	UL 508	E175199

Declarations of conformity and manufacturer's declarations

Approval	Standard	Certificate Name
EU-Declaration of Conformity WAGO GmbH & Co. KG	-	-
UK-Declaration of Conformity WAGO GmbH & Co. KG	-	-

Approvals for marine applications

Approval	Standard	Certificate Name
ABS American Bureau of Shipping	-	25-0415412
BSH Bundesamt fuer Seeschiffahrt und Hydrographie	-	1104
BV Bureau Veritas S.A.	-	30389/C0 BV
DNV DNV GL SE	DNV-CG-0339,Aug.2021	TAA0000194
KR Korean Register of Shipping	-	KR HMB05880-AC001
LR Lloyds Register EMEA	-	LR22180952TA
PRS Polski Rejestr Statków	-	TE/1101/880590/23
RINA RINA Germany GmbH	-	ELE343521XG001

Approvals for hazardous areas

Approval	Standard	Certificate Name
ATEX TUEV Nord Cert GmbH	EN 60079-0	TUEV14ATEX148929X (II 3 G Ex ec IIC T4 Gc)
CCCEx CQST/CNEx	CNCA-C23-01	2020312310000213 (Ex ec IIC T4 Gc)
INMETRO TÜV Rheinland do Brasil Ltda.	IEC 60079-0	TÜV 12.1297 X
UKEx WAGO GmbH & Co. KG	EN 60079-0	UKCA_WA GO22UKEX003X_ec
UL Underwriters Laboratories Inc. (HAZARDOUS LOCATIONS)	UL 121201	E198726

Downloads

Environmental Product Compliance

Compliance Search

Environmental Product Compliance 750-532

Continued on next page

Documentation

Manual

Product Manual 4-channel, 24VDC, 0.5A	2511804043 | 3 | en-US | 2025-07-01 13:00 03.09.2025	pdf 1014.10 KB	
System Manual Series 750/753			

System Description

750/753 Series I/O-System – General Product Information		pdf 953.35 KB	
Overview on WAGO-I/O-SYSTEM 750 approvals		pdf 770.48 KB	

Bid Text

750-532	12.07.2017	doc 28.50 KB	
750-532	19.02.2019	xml 4.59 KB	

Instruction Leaflet

CCC Ex (Additional information)	26.04.2023	pdf 159.76 KB	

CAD/CAE-Data

CAD data

2D/3D Models 750-532

CAE data

EPLAN Data Portal 750-532

WSCAD Universe 750-532

ZUKEN Portal 750-532

Device Files

Device Driver

WAGO USB Service Kabel Treiber / Serie 750 und 857	6.5.3.0 10.09.2014	zip 4721.96 KB	

1 Compatible Products

1.1 Optional Accessories

1.1.1 DIN-rail

1.1.1.1 Mounting accessories



Item No.: 210-196
Aluminum carrier rail; 35 x 8.2 mm; 1.6 mm thick; 2 m long; unslotted; similar to EN 60715; silver-colored



Item No.: 210-198
Copper carrier rail; 35 x 15 mm; 2.3 mm thick; 2 m long; unslotted; according to EN 60715; copper-colored



Item No.: 210-197
Steel carrier rail; 35 x 15 mm; 1.5 mm thick; 2 m long; slotted; similar to EN 60715; silver-colored



Item No.: 210-114
Steel carrier rail; 35 x 15 mm; 1.5 mm thick; 2 m long; unslotted; similar to EN 60715; silver-colored



Item No.: 210-118
Steel carrier rail; 35 x 15 mm; 2.3 mm thick; 2 m long; unslotted; according to EN 60715; silver-colored



Item No.: 210-115
Steel carrier rail; 35 x 7.5 mm; 1 mm thick; 2 m long; slotted; according to EN 60715; "Hole width 18 mm; silver-colored



Item No.: 210-112
Steel carrier rail; 35 x 7.5 mm; 1 mm thick; 2 m long; slotted; according to EN 60715; "Hole width 25 mm; silver-colored



Item No.: 210-113
Steel carrier rail; 35 x 7.5 mm; 1 mm thick; 2 m long; unslotted; according to EN 60715; silver-colored

1.1.2 Marking

1.1.2.1 Group marker carrier



Item No.: 750-107
Group marker carrier

1.1.2.2 Marker



Item No.: 2009-145/000-006
Mini-WSB Inline; for Smart Printer; 1700 pieces on roll; stretchable 5 - 5.2 mm; plain; snap-on type; blue



Item No.: 2009-145/000-007
Mini-WSB Inline; for Smart Printer; 1700 pieces on roll; stretchable 5 - 5.2 mm; plain; snap-on type; gray



Item No.: 2009-145/000-023
Mini-WSB Inline; for Smart Printer; 1700 pieces on roll; stretchable 5 - 5.2 mm; plain; snap-on type; green



Item No.: 2009-145/000-012
Mini-WSB Inline; for Smart Printer; 1700 pieces on roll; stretchable 5 - 5.2 mm; plain; snap-on type; orange



Item No.: 2009-145/000-005
Mini-WSB Inline; for Smart Printer; 1700 pieces on roll; stretchable 5 - 5.2 mm; plain; snap-on type; red



Item No.: 2009-145/000-024
Mini-WSB Inline; for Smart Printer; 1700 pieces on roll; stretchable 5 - 5.2 mm; plain; snap-on type; violet



Item No.: 2009-145
Mini-WSB Inline; for Smart Printer; 1700 pieces on roll; stretchable 5 - 5.2 mm; plain; snap-on type; white



Item No.: 2009-145/000-002
Mini-WSB Inline; for Smart Printer; 1700 pieces on roll; stretchable 5 - 5.2 mm; plain; snap-on type; yellow



Item No.: 248-501/000-006
Mini-WSB marking card; as card; not stretchable; plain; snap-on type; blue



Item No.: 248-501/000-007
Mini-WSB marking card; as card; not stretchable; plain; snap-on type; gray



Item No.: 248-501/000-023
Mini-WSB marking card; as card; not stretchable; plain; snap-on type; green



Item No.: 248-501/000-017
Mini-WSB marking card; as card; not stretchable; plain; snap-on type; light green



Item No.: 248-501/000-012
Mini-WSB marking card; as card; not stretchable; plain; snap-on type; orange



Item No.: 248-501/000-005
Mini-WSB marking card; as card; not stretchable; plain; snap-on type; red



Item No.: 248-501/000-024
Mini-WSB marking card; as card; not stretchable; plain; snap-on type; violet



Item No.: 248-501
Mini-WSB marking card; as card; not stretchable; plain; snap-on type; white



Item No.: 248-501/000-002
Mini-WSB marking card; as card; not stretchable; plain; snap-on type; yellow

1.1.2.3 Marker carrier



Item No.: 750-103
Group marker carrier

1.1.3 Shield termination

1.1.3.1 Shield clamping saddles



Item No.: 790-108
Shield clamping saddle; 11 mm wide; diameter of compatible conductor; 3 … 8 mm



Item No.: 790-208
Shield clamping saddle; 12.4 mm wide; 3 … 8 mm



Item No.: 790-116
Shield clamping saddle; 19 mm wide; diameter of compatible conductor; 7 … 16 mm



Item No.: 790-216
Shield clamping saddle; 21.8 mm wide; 6 … 16 mm



Item No.: 790-124
Shield clamping saddle; 27 mm wide; diameter of compatible conductor; 6 … 24 mm



Item No.: 790-220
Shield clamping saddle; 30 mm wide; 6 … 20 mm



Item No.: 790-140
Shield clamping saddle; diameter of compatible conductor

Continued on next page

1.1.4 Supply module

1.1.4.1 Supply module



Item No.: 750-612
Power Supply; 0 … 230 V AC/DC



Item No.: 750-602
Power Supply; 24 VDC



Item No.: 750-601
Power Supply; 24 VDC; fuse holder



Item No.: 750-610
Power Supply; 24 VDC; fuse holder; Diagnostics

1.1.5 System enclosure

1.1.5.1 System enclosure



Item No.: 850-825
IP65 enclosure; Aluminium (RAL 7032); WxHxD (160x100x160 mm); 9 x M12, 4 x M20



Item No.: 850-826
IP65 enclosure; Aluminium (RAL 7032); WxHxD (240x100x160 mm); 4 x M20, 4 x M16, 14 x M12 cable grip



Item No.: 850-827
IP65 enclosure; Aluminium (RAL 7032); WxHxD (320x100x160 mm); 4 x M20, 8 x M16, 17 x M12 cable grip



Item No.: 850-828
IP65 enclosure; Aluminium (RAL 7032); WxHxD (480x100x160 mm); 4 x M20, 10 x M16, 35 x M12 cable grip



Item No.: 850-826/002-000
IP65 enclosure; Aluminium (RAL 7035); WxHxD (240x100x160 mm); 4 x M20, 4 x M16, 14 x M12 cable grip



Item No.: 850-827/002-000
IP65 enclosure; Aluminium (RAL 7035); WxHxD (320x100x160 mm); 4 x M20, 8 x M16, 17 x M12 cable grip



Item No.: 850-828/002-000
IP65 enclosure; Aluminium (RAL 7035); WxHxD (480x100x160 mm); 4 x M20, 10 x M16, 35 x M12 cable grip



Item No.: 850-834
IP65 enclosure; Polyester (RAL 7032); WxHxD (164x100x164 mm); 9 x M12, 4 x M20



Item No.: 850-835
IP65 enclosure; Polyester (RAL 7032); WxHxD (244x100x164 mm); 4 x M20, 4 x M16, 14 x M12 cable grip



Item No.: 850-836
IP65 enclosure; Polyester (RAL 7032); WxHxD (324x100x164 mm); 4 x M20, 8 x M16, 17 x M12 cable grip



Item No.: 850-814/002-000
IP65 enclosure; Sheet steel (RAL 7035); WxHxD (200x120x200 mm); without flange plate



Item No.: 850-815/002-000
IP65 enclosure; Sheet steel (RAL 7035); WxHxD (300x120x200 mm); without flange plate



Item No.: 850-816/002-000
IP65 enclosure; Sheet steel (RAL 7035); WxHxD (400x120x200 mm); without flange plate



Item No.: 850-817/002-000
IP65 enclosure; Sheet steel (RAL 7035); WxHxD (600x120x200 mm); without flange plate