Data Sheet | Item Number: 750-539

4-channel digital output; 24 VDC; Valve; Intrinsically safe

https://www.wago.com/750-539

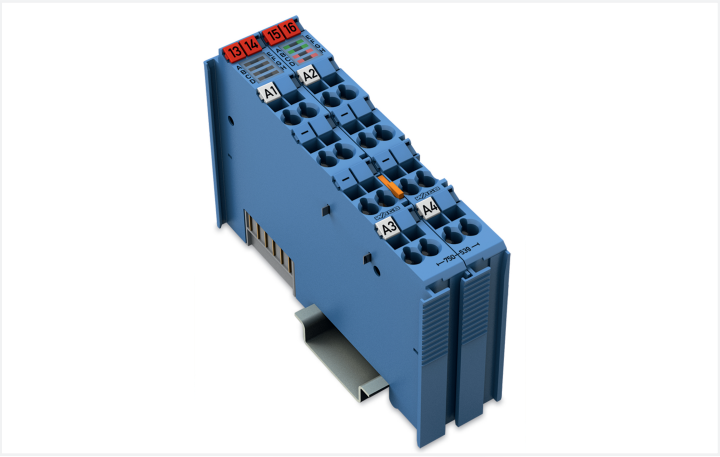

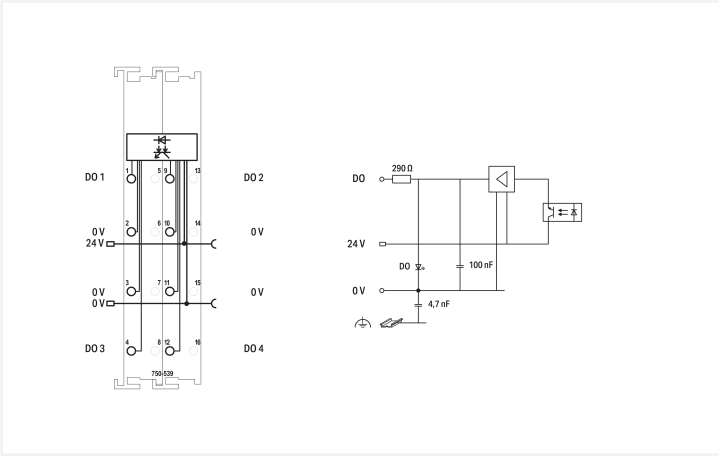

Color: light blue

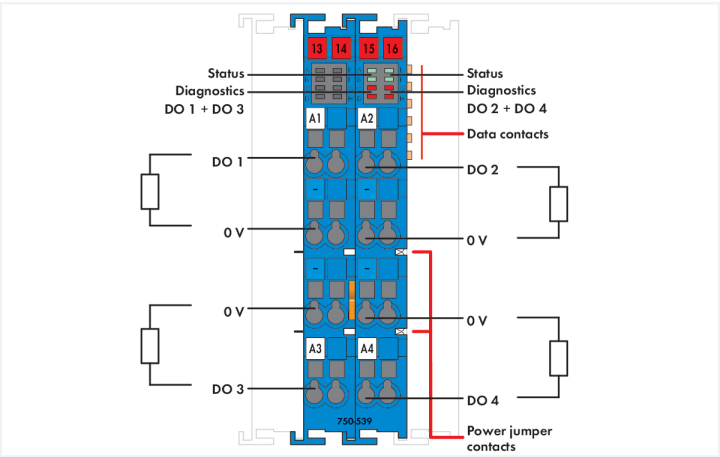

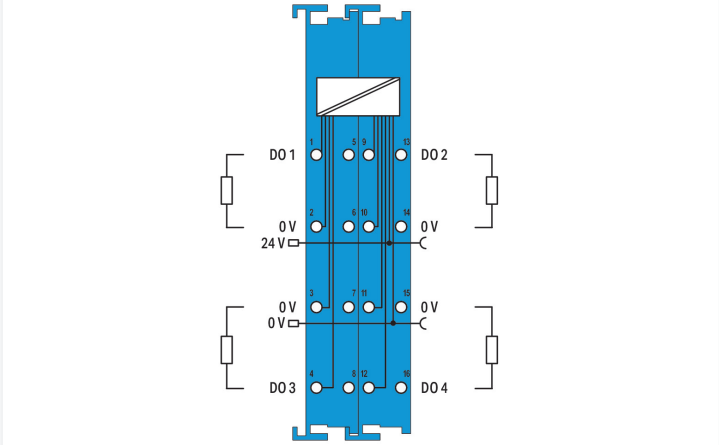

This digital output module controls actuators operating in Zone 0+1 hazardous areas.
Intrinsically safe valves can be directly controlled.
The WAGO I/O System 750/753 must be installed either in Zone 2 or in a non-hazardous area.
All outputs are electronically short-circuit-protected.
Indicators:

- Green LED (output status)
- Red LED (wire breakage, short circuit)

Field and system levels are electrically isolated.

Notes

Note	The digital output module must only be operated via 24 VDC Ex i! General information on explosion protection, including installation regulations, can be found in the WAGO I/O System 750/753 manuals!

Technical data

Item description	4-Channel Digital Output; 24 VDC; Valve
Number of digital outputs	4
Total number of channels (module)	4
Signal type	Digital
Signal type (voltage)	24 VDC
Actuator connection	4 x (2-wire)
Output current per channel	0.047 A
Output characteristic	high-side switching
Switching frequency (max.)	100 Hz
Load type	Resistive, inductive, lamp load
Internal resistance R_i	290 Ω
Intrinsically safe Ex i	Yes
Input data width (internal) max.	4 bits
Output data width (internal) max.	4 bits
Supply voltage (system)	5 VDC; via data contacts
Current consumption (system supply)	20 mA
Supply voltage (field)	24 VDC; (Ex i power supply: U_o = max. 26.8 V); via power jumper contacts (supply via blade contact; distribution via spring contact)
Current consumption, field supply (module with no external load)	10 mA
Power consumption $P_{max.}$	4.86 W (at 47 mA output current)
Power loss P_l	2.86 W (at 47 mA output current)
Isolation	UM = 375 V system/supply
Number of incoming power jumper contacts	2
Number of outgoing power jumper contacts	2
Current carrying capacity (power jumper contacts)	1 A
Indicators	LED (A, B, E, F) green: Status DO 1 … DO 4; LED (C, D, G, H) red: Diagnostics DO 1 … DO 4

Explosion protection

Identification	**ATEX:** II 3 (1) G Ex ec [ia Ga] IIC T4 Gc; II (1) D [Ex ia Da] IIIC; I (M1) [Ex ia Ma] I **IECEx/INMETRO:** Ex ec [ia Ga] IIC T4 Gc; [Ex ia Da] IIIC; [Ex ia Ma] I
Ex standard	EN IEC 60079-0, -7, -11
Safety-relevant data (circuit)	U_o = 26.8 V; I_o = 115.3 mA; P_o = 772 mW; linear characteristic curve
Reactances Ex ia IIC	$_{Lo}$ = 2.67 µH; $_{Co}$ = 92 nF
Reactances Ex ia IIB	L_o = 10.69 mH; C_o = 720 nF
Reactances Ex ia IIA	L_o = 21.39 mH; C_o = 2.37 µF
Reactances Ex ia I	L_o = 35.1 mH; C_o = 4.2 µF
Reactances (note)	Reactances without accounting for the concurrence of capacitance (C_o) and inductance (L_o)

Connection Data

Connection technology: I/O	8 x CAGE CLAMP®
Connectable conductor materials	Copper
Connection type	Inputs/outputs
Solid conductor	0.08 … 2.5 mm² / 28 … 14 AWG
Fine-stranded conductor	0.08 … 2.5 mm² / 28 … 14 AWG
Strip length	8 … 9 mm / 0.31 … 0.35 inches

Continued on next page

Physical data

Width	24 mm / 0.945 inches
Height	100 mm / 3.937 inches
Depth	67.8 mm / 2.669 inches
Depth from upper-edge of DIN-rail	60.6 mm / 2.386 inches

Mechanical data

Mounting type	DIN-35 rail

Material data

Color	light blue
Housing material	Polycarbonate; polyamide 6.6
Fire load	1.692 MJ
Weight	88.5 g
Conformity marking	CE

Environmental requirements

Ambient temperature (operation)	0 … +55 °C
Ambient temperature (storage)	-25 … +85 °C
Protection type	IP20
Pollution degree	2 per IEC 61131-2
Operating altitude	0 … 2000 m / 0 … 6562 ft
Mounting position	Horizontal left, horizontal right, horizontal top, horizontal bottom, vertical top and vertical bottom
Relative humidity (without condensation)	95 %
Vibration resistance	4g per IEC 60068-2-6
Shock resistance	15g per IEC 60068-2-27
EMC immunity to interference	per EN 61000-6-2, marine applications
EMC emission of interference	per EN 61000-6-3, marine applications
Exposure to pollutants	per IEC 60068-2-42 and IEC 60068-2-43
Permissible H_2S contaminant concentration at a relative humidity 75 %	10 ppm
Permissible SO_2 contaminant concentration at a relative humidity 75 %	25 ppm

Commercial data

PU (SPU)	1 pcs
Packaging type	Box
Country of origin	DE
GTIN	4055143514149
Customs tariff number	85371098990

Product Classification

UNSPSC	32151705
eCl@ss 10.0	27-24-26-04
eCl@ss 9.0	27-24-26-04
ETIM 9.0	EC001599
ETIM 10.0	EC001599
ECCN	NO US CLASSIFICATION

Continued on next page

Environmental Product Compliance

CAS-No.	1303-86-2 1317-36-8 7439-92-1
REACH Candidate List Substance	Diboron trioxide Lead Lead monoxide
RoHS Compliance Status	Compliant,With Exemption
RoHS Exemption	6(c) 7(a) 7(c)-I 7(c)-II
SCIP notification number (Austria)	e34a3d4a-a1fb-40f8-bb5b-54bf7c28fdaa
SCIP notification number (Belgium)	2ce8ca47-89a4-4c43-9427-dd8fe99d3e7b
SCIP notification number (Bulgaria)	75528983-07fe-4087-af2d-af7edf979c73
SCIP notification number (Czech Republic)	f9fb62b0-c110-4b20-b537-5f7510b2a650
SCIP notification number (Denmark)	64b48830-f285-4cef-aac8-318ab049c8ef
SCIP notification number (Finland)	d21d7caf-d593-4078-a77f-144b060c5b80
SCIP notification number (France)	8b7b3506-826e-4320-9f88-d4aca5af520d
SCIP notification number (Germany)	8ec2c402-dd38-40d4-a575-630c5dcb958a
SCIP notification number (Hungary)	441ec9b2-f306-4c04-afe9-d73926e312af
SCIP notification number (Italy)	74e79e14-0ac4-47f2-8486-55872426dabd
SCIP notification number (Netherlands)	74678b8e-c44c-499b-a41f-66be291f6a26
SCIP notification number (Poland)	7afc2831-b145-414f-83b7-93c174189b9a
SCIP notification number (Romania)	470ef858-fac1-4205-8178-bee373f05ff7
SCIP notification number (Sweden)	3528ae04-7447-476d-a23d-783b22d2f64a

Approvals / Certificates

General approvals

Approval	Standard	Certificate Name
EAC GZO Almaty Standart	TP TC 020/2011	EAC CoC 03083
KC National Radio Research Agency	Article 58-2, Clause 3	MSIP-REM-W43-DOM750
UL Underwriters Laboratories Inc. (ORDINARY LOCATIONS)	-	E175199

Declarations of conformity and manufacturer's declarations

Approval	Standard	Certificate Name
EU-Ex-Declaration of Conformity WAGO GmbH & Co. KG	-	-
UK-Ex-Declaration of Conformity WAGO GmbH & Co. KG	-	-

Approvals for marine applications

Approval	Standard	Certificate Name
ABS American Bureau of Shipping	-	25-0415412
DNV DNV GL SE	DNV-CG-0339,Aug.2021	TAA0000194
KR Korean Register of Shipping	-	KR HMB05880-AC001
LR Lloyds Register EMEA	-	LR22180952TA
PRS Polski Rejestr Statków	-	TE/1101/880590/23

Approvals for marine applications

RINA RINA Germany GmbH	-	ELE343521XG001

Continued on next page

Approvals for hazardous areas

Approval	Standard	Certificate Name
ATEX TUEV Nord Cert GmbH	EN 60079	TUEV12ATEX106032X (Ex ec[iaGa] IIC T4 Gc, [Ex iaDa] IIIC, [Ex iaMa] I)
CCC CNEX	CNCA-C23-01	2020312310000211 (Ex ec [iaGa] IIC T4 Gc, [Ex iaDa] II-IC, [Ex iaMa] I)
IECEx TUEV Nord Cert GmbH	IEC 60079	IECEx TUN12.0039X (Ex ec [iaGa] IIC T4 Gc, [Ex iaDa] II-IC, [Ex iaMa] I)
INMETRO TÜV Rheinland do Brasil Ltda.	-	TÜV_14.1911_X
KTL Korea Testing Laboratory	KOSHA Article 34, IEC60079-0	21-KA4BO-0560X
UKEx Element Materials Technology UK	-	EMA21UKEX0069X
UL Underwriters Laboratories Inc. (HAZARDOUS LOCATIONS)	UL 121201	E198726

Downloads

Environmental Product Compliance

Compliance Search

Environmental Product Compliance 750-539	

Documentation

Manual

Product Manual 4-Channel, 24 VDC, VALVE Ex i	2485615371 | 3 | en-US | 2025-09-11 11:33 14.11.2025	pdf 2999.10 KB	
System Manual Series 750/753			

System Description

750/753 Series I/O-System – General Product Information	pdf 953.35 KB	
Overview on WAGO-I/O-SYSTEM 750 approvals	pdf 770.48 KB	
Ex i Overview	pdf 442.07 KB	

Bid Text

750-539	19.02.2019	xml 5.84 KB	
750-539	06.10.2017	doc 31.50 KB	

Instruction Leaflet

CCC Ex (Additional information)	26.04.2023	pdf 143.96 KB	

Continued on next page

CAD/CAE-Data

CAD data	CAE data
2D/3D Models 750-539	EPLAN Data Portal 750-539
	WSCAD Universe 750-539
	ZUKEN Portal 750-539

1 Compatible Products

1.1 Optional Accessories

1.1.1 DIN-rail

1.1.1.1 Mounting accessories



Item No.: 210-196
Aluminum carrier rail; 35 x 8.2 mm; 1.6 mm thick; 2 m long; unslotted; similar to EN 60715; silver-colored



Item No.: 210-198
Copper carrier rail; 35 x 15 mm; 2.3 mm thick; 2 m long; unslotted; according to EN 60715; copper-colored



Item No.: 210-197
Steel carrier rail; 35 x 15 mm; 1.5 mm thick; 2 m long; slotted; similar to EN 60715; silver-colored



Item No.: 210-114
Steel carrier rail; 35 x 15 mm; 1.5 mm thick; 2 m long; unslotted; similar to EN 60715; silver-colored



Item No.: 210-118
Steel carrier rail; 35 x 15 mm; 2.3 mm thick; 2 m long; unslotted; according to EN 60715; silver-colored



Item No.: 210-115
Steel carrier rail; 35 x 7.5 mm; 1 mm thick; 2 m long; slotted; according to EN 60715; "Hole width 18 mm; silver-colored



Item No.: 210-112
Steel carrier rail; 35 x 7.5 mm; 1 mm thick; 2 m long; slotted; according to EN 60715; "Hole width 25 mm; silver-colored



Item No.: 210-113
Steel carrier rail; 35 x 7.5 mm; 1 mm thick; 2 m long; unslotted; according to EN 60715; silver-colored

1.1.2 Marking

1.1.2.1 Group marker carrier



Item No.: 750-107
Group marker carrier

1.1.2.2 Marker



Item No.: 2009-145/000-006
Mini-WSB Inline; for Smart Printer; 1700 pieces on roll; stretchable 5 - 5.2 mm; plain; snap-on type; blue



Item No.: 2009-145/000-007
Mini-WSB Inline; for Smart Printer; 1700 pieces on roll; stretchable 5 - 5.2 mm; plain; snap-on type; gray



Item No.: 2009-145/000-023
Mini-WSB Inline; for Smart Printer; 1700 pieces on roll; stretchable 5 - 5.2 mm; plain; snap-on type; green



Item No.: 2009-145/000-012
Mini-WSB Inline; for Smart Printer; 1700 pieces on roll; stretchable 5 - 5.2 mm; plain; snap-on type; orange



Item No.: 2009-145/000-005
Mini-WSB Inline; for Smart Printer; 1700 pieces on roll; stretchable 5 - 5.2 mm; plain; snap-on type; red



Item No.: 2009-145/000-024
Mini-WSB Inline; for Smart Printer; 1700 pieces on roll; stretchable 5 - 5.2 mm; plain; snap-on type; violet



Item No.: 2009-145
Mini-WSB Inline; for Smart Printer; 1700 pieces on roll; stretchable 5 - 5.2 mm; plain; snap-on type; white



Item No.: 2009-145/000-002
Mini-WSB Inline; for Smart Printer; 1700 pieces on roll; stretchable 5 - 5.2 mm; plain; snap-on type; yellow



Item No.: 248-501/000-006
Mini-WSB marking card; as card; not stretchable; plain; snap-on type; blue



Item No.: 248-501/000-007
Mini-WSB marking card; as card; not stretchable; plain; snap-on type; gray



Item No.: 248-501/000-023
Mini-WSB marking card; as card; not stretchable; plain; snap-on type; green



Item No.: 248-501/000-017
Mini-WSB marking card; as card; not stretchable; plain; snap-on type; light green

Continued on next page

1.1.2.2 Marker



Item No.: 248-501/000-012
Mini-WSB marking card; as card; not stretchable; plain; snap-on type; orange



Item No.: 248-501/000-005
Mini-WSB marking card; as card; not stretchable; plain; snap-on type; red



Item No.: 248-501/000-024
Mini-WSB marking card; as card; not stretchable; plain; snap-on type; violet



Item No.: 248-501
Mini-WSB marking card; as card; not stretchable; plain; snap-on type; white



Item No.: 248-501/000-002
Mini-WSB marking card; as card; not stretchable; plain; snap-on type; yellow

1.1.2.3 Marker carrier



Item No.: 750-103
Group marker carrier

1.1.3 Shield termination

1.1.3.1 Shield clamping saddles



Item No.: 790-108
Shield clamping saddle; 11 mm wide; diameter of compatible conductor; 3 … 8 mm



Item No.: 790-208
Shield clamping saddle; 12.4 mm wide; 3 … 8 mm



Item No.: 790-116
Shield clamping saddle; 19 mm wide; diameter of compatible conductor; 7 … 16 mm



Item No.: 790-216
Shield clamping saddle; 21.8 mm wide; 6 … 16 mm



Item No.: 790-124
Shield clamping saddle; 27 mm wide; diameter of compatible conductor; 6 … 24 mm



Item No.: 790-220
Shield clamping saddle; 30 mm wide; 6 … 20 mm



Item No.: 790-140
Shield clamping saddle; diameter of compatible conductor

1.1.4 Supply module

1.1.4.1 Supply module



Item No.: 750-606
Power Supply; 24 VDC; Diagnostics; Intrinsically safe



Item No.: 750-625/000-001
Power Supply; 24 VDC; Intrinsically safe