Data Sheet | Item Number: 750-815/325-000

Controller MODBUS; RS-485; 115,2 kBd; Ext. Temperature

https://www.wago.com/750-815/325-000



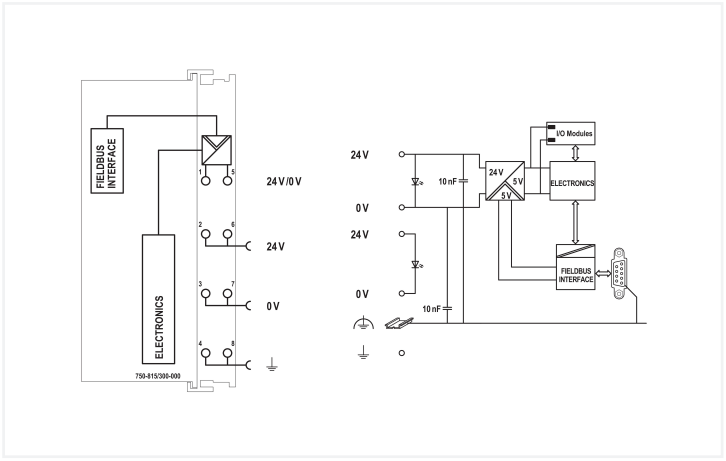

Similar to illustration

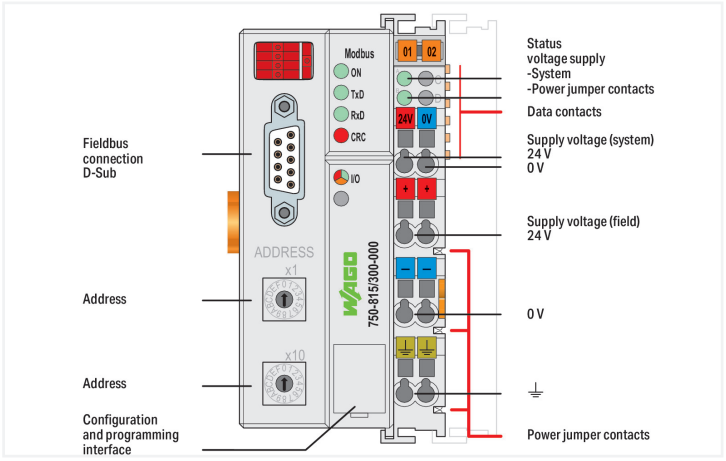

The MODBUS Controller is an expansion for the WAGO I/O System.
This controller combines a WAGO MODBUS Fieldbus Coupler with PLC functionality.
Application programming is IEC 61131-3 compliant.
The programmer can access all fieldbus and I/O data.
Features and applications:

- Decentralized control to optimize support for a PLC or PC
- Devide complex applications into individually testable units
- Programmable fault response in the event of fieldbus failure
- Signal pre-processing to reduce fieldbus transmissions
- Directly control peripheral equipment for faster system response times
- Stand-alone, compact controller

Technical data

Communications	Modbus RTU
Visualization	none
CPU	16 bits
Programming languages per IEC 61131-3	Instruction List (IL) Ladder Diagram (LD) Function Block Diagram (FBD) Continuous Function Chart (CFC) Structured Text (ST) Sequential Function Chart (SFC)
Programming environment	WAGO-I/O-*PRO* V2.3 (based on CODESYS V2.3)
Configuration options	WAGO-I/O-*CHECK* Rotary encoder switch
Cycle time	< 3 ms for 1000 bit instructions/ 256 digital I/O
Transmission rate	150 Bd ... 115.2 kBd
Bus segment length (max.)	1200 m
Transmission medium (communication/fieldbus)	Shielded Cu cable 2 (4) x 0.25 mm²
Number of fieldbus nodes on master (max.)	247
Number of I/O points	6000
Program memory	32 KB
Data memory	32 KB
Non-volatile software memory	8 KB
Memory for fieldbus input variables (max.)	512 bytes
Memory for fieldbus output variables (max.)	512 bytes
Number of modules per node (max.)	64
Number of modules without a bus extension (max.)	64
Input and output process image (fieldbus) max.	1024 bytes/1024 bytes
Indicators	LED (ON, LINK, TxD/RxD) green: Fieldbus initialization, send, receive; LED (CRC) red: Checksum error; LED (I/O) red/green/orange: Local data bus status; LED (A, B) green: System power supply status, field supply
Supply voltage (system)	24 VDC, SELV/PELV (-25 ... +30 %); via wiring interface (CAGE CLAMP® connection); External fuse required: 2 A slow-blow
Input current (typ.) at nominal load (24 V)	500 mA
Power supply efficiency (typ.) at nominal load (24 V)	87 %
Current consumption (system supply)	350 mA
Total current (system supply)	1650 mA
Supply voltage (field)	24 VDC, SELV/PELV (-25 ... +30 %); via power jumper contacts (supply via CAGE CLAMP® connection; distribution via spring contact); External fuse required: 10 A slow-blow
Current carrying capacity (power jumper contacts)	10 A
Number of outgoing power jumper contacts	3
Isolation	500 V system/field

Connection Data

Connection technology: communication/fieldbus	Modbus RTU: 1 x D-sub 9 socket
Connection technology: system supply	2 x CAGE CLAMP®
Connection technology: field supply	6 x CAGE CLAMP®
Connectable conductor materials	Copper
Connection type	System/field supply
Solid conductor	0.08 ... 2.5 mm² / 28 ... 14 AWG
Fine-stranded conductor	0.08 ... 2.5 mm² / 28 ... 14 AWG
Strip length	8 ... 9 mm / 0.31 ... 0.35 inches
Connection technology: device configuration	1 x Male connector; 4-pole

Continued on next page

Physical data

Width	50.5 mm / 1.988 inches
Height	100 mm / 3.937 inches
Depth	71.1 mm / 2.799 inches
Depth from upper-edge of DIN-rail	63.9 mm / 2.516 inches

Mechanical data

Mounting type	DIN-35 rail

Material data

Housing material	Polycarbonate; polyamide 6.6
Fire load	1.918 MJ
Weight	187.9 g
Conformity marking	CE

Environmental requirements

Ambient temperature (operation)	-20 … +60 °C
Ambient temperature (storage)	-40 … +85 °C
Protection type	IP20
Pollution degree	2 per IEC 61131-2
Operating altitude	without temperature derating: 0 … 2000 m; with temperature derating: 2000 … 5000 m (0.5 K/100 m); 5000 m (max.)
Mounting position	Horizontal left, horizontal right, horizontal top, horizontal bottom, vertical top and vertical bottom
Relative humidity (without condensation)	95 %
Relative humidity (with condensation)	Short-term condensation per Class 3K6/IEC EN 60721-3-3 and E-DIN 40046-721-3, accounting for a temperature range of –20 to +60 °C (except for wind-driven precipitation, water and ice formation)
Vibration resistance	4g per IEC 60068-2-6
Shock resistance	15g per IEC 60068-2-27
EMC immunity to interference	per EN 61000-6-2, marine applications
EMC emission of interference	per EN 61000-6-3, marine applications
Exposure to pollutants	per IEC 60068-2-42 and IEC 60068-2-43
Permissible H_2S contaminant concentration at a relative humidity 75 %	10 ppm
Permissible SO_2 contaminant concentration at a relative humidity 75 %	25 ppm

Commercial data

Product Group	15 (I/O System)
PU (SPU)	1 pcs
Packaging type	Box
Country of origin	DE
GTIN	4055143079914
Customs tariff number	85371091990

Continued on next page

Product Classification

UNSPSC	32151705
eCl@ss 10.0	27-24-26-07
eCl@ss 9.0	27-24-26-07
ETIM 9.0	EC000236
ETIM 10.0	EC000236
ECCN	NO US CLASSIFICATION

Environmental Product Compliance

CAS-No.	12060-00-3 1303-86-2 1317-36-8 25550-51-0 7439-92-1 79-94-7
REACH Candidate List Substance	2,2',6,6'-tetrabromo-4,4'-isopropylidenediphenol 4-Methyl-1,2-cyclohexanedicarboxylic anhydride Diboron trioxide Lead Lead monoxide Lead titanium oxide (PbTiO3)
RoHS Compliance Status	Compliant,With Exemption
RoHS Exemption	6(c) 7(a) 7(c)-I 7(c)-II 7c
SCIP notification number (Bulgaria)	57be7739-9815-4f55-b358-756f614539b6
SCIP notification number (Czech Republic)	4c6fbd40-b400-4a6a-9365-e92103ea9e7b

Approvals / Certificates

General approvals

Approval	Standard	Certificate Name
EAC GZO Almaty Standart	TP TC 020/2011	EAC CoC 03083
KC National Radio Research Agency	Article 58-2, Clause 3	MSIP-REM-W43-PFC750
UL Underwriters Laboratories Inc. (ORDINARY LOCATIONS)	UL 508	E175199

Declarations of conformity and manufacturer's declarations

Approval	Standard	Certificate Name
EU-Declaration of Conformity WAGO GmbH & Co. KG	-	-
UK-Declaration of Conformity WAGO GmbH & Co. KG	-	-

Approvals for hazardous areas

Approval	Standard	Certificate Name
ATEX TUEV Nord Cert GmbH	EN 60079-0	TUEV14ATEX148929X (II 3 G Ex ec IIC T4 Gc)
CCCEx CQST/CNEx	CNCA-C23-01	2020312310000213 (Ex ec IIC T4 Gc)
IECEx TUEV Nord Cert GmbH	IEC 60079-0	IECEx TUN 14.0035 X (Ex ec IIC T4 Gc)
INMETRO TÜV Rheinland do Brasil Ltda.	IEC 60079-0	TÜV 12.1297 X

Approvals for hazardous areas

UKEx WAGO GmbH & Co. KG	EN 60079-0	UKCA_WA GO22UKEX003X_ec
UL Underwriters Laboratories Inc. (HAZARDOUS LOCATIONS)	UL 121201	E198726

Continued on next page

Downloads

Environmental Product Compliance

Compliance Search

Environmental Product Compliance 750-815/325-000		

Documentation

Manual

System Manual Series 750/753		
Product Manual MODBUS RTU Programmable Fieldbus Controller	V 1.0.0	pdf 5833.97 KB

System Description

Overview on WAGO-I/O-SYSTEM 750 approvals		pdf 770.48 KB
750 Controller, General Product Information		pdf 507.50 KB

Bid Text

750-815/325-000	19.02.2019	xml 6.12 KB
750-815/325-000	13.07.2015	doc 29.50 KB

Instruction Leaflet

CCC Ex (Additional information)	26.04.2023	pdf 159.76 KB

CAD/CAE-Data

CAD data

2D/3D Models 750-815/325-000

CAE data

EPLAN Data Portal 750-815/325-000
WSCAD Universe 750-815/325-000
ZUKEN Portal 750-815/325-000

Engineering-Software

Configuration and Commissioning Software

WAGO Ethernet Settings		
(759-316) WAGO Ethernet Settings / Serie 750	06.18.01.01 02.09.2021	zip 26678.54 KB

Continued on next page

1 Compatible Products

1.1 Optional Accessories

1.1.1 Communication

1.1.1.1 Communication cable



Item No.: 750-923
Configuration cable; USB connector; Length: 2.5 m



Item No.: 750-923/000-001
Configuration cable; USB connector; Length: 5 m

1.1.2 DIN-rail

1.1.2.1 Mounting accessories



Item No.: 210-196
Aluminum carrier rail; 35 x 8.2 mm; 1.6 mm thick; 2 m long; unslotted; similar to EN 60715; silver-colored



Item No.: 210-198
Copper carrier rail; 35 x 15 mm; 2.3 mm thick; 2 m long; unslotted; according to EN 60715; copper-colored



Item No.: 210-197
Steel carrier rail; 35 x 15 mm; 1.5 mm thick; 2 m long; slotted; similar to EN 60715; silver-colored



Item No.: 210-114
Steel carrier rail; 35 x 15 mm; 1.5 mm thick; 2 m long; unslotted; similar to EN 60715; silver-colored



Item No.: 210-118
Steel carrier rail; 35 x 15 mm; 2.3 mm thick; 2 m long; unslotted; according to EN 60715; silver-colored



Item No.: 210-115
Steel carrier rail; 35 x 7.5 mm; 1 mm thick; 2 m long; slotted; according to EN 60715; "Hole width 18 mm; silver-colored



Item No.: 210-112
Steel carrier rail; 35 x 7.5 mm; 1 mm thick; 2 m long; slotted; according to EN 60715; "Hole width 25 mm; silver-colored



Item No.: 210-113
Steel carrier rail; 35 x 7.5 mm; 1 mm thick; 2 m long; unslotted; according to EN 60715; silver-colored

1.1.3 Marking

1.1.3.1 Group marker carrier



Item No.: 750-106
Group marker carrier

1.1.3.2 Marker



Item No.: 750-100
Marker card; as a DIN A4 sheet; plain



Item No.: 2009-145/000-006
Mini-WSB Inline; for Smart Printer; 1700 pieces on roll; stretchable 5 - 5.2 mm; plain; snap-on type; blue



Item No.: 2009-145/000-007
Mini-WSB Inline; for Smart Printer; 1700 pieces on roll; stretchable 5 - 5.2 mm; plain; snap-on type; gray



Item No.: 2009-145/000-023
Mini-WSB Inline; for Smart Printer; 1700 pieces on roll; stretchable 5 - 5.2 mm; plain; snap-on type; green



Item No.: 2009-145/000-012
Mini-WSB Inline; for Smart Printer; 1700 pieces on roll; stretchable 5 - 5.2 mm; plain; snap-on type; orange



Item No.: 2009-145/000-005
Mini-WSB Inline; for Smart Printer; 1700 pieces on roll; stretchable 5 - 5.2 mm; plain; snap-on type; red



Item No.: 2009-145/000-024
Mini-WSB Inline; for Smart Printer; 1700 pieces on roll; stretchable 5 - 5.2 mm; plain; snap-on type; violet



Item No.: 2009-145
Mini-WSB Inline; for Smart Printer; 1700 pieces on roll; stretchable 5 - 5.2 mm; plain; snap-on type; white



Item No.: 2009-145/000-002
Mini-WSB Inline; for Smart Printer; 1700 pieces on roll; stretchable 5 - 5.2 mm; plain; snap-on type; yellow



Item No.: 248-501/000-006
Mini-WSB marking card; as card; not stretchable; plain; snap-on type; blue



Item No.: 248-501/000-007
Mini-WSB marking card; as card; not stretchable; plain; snap-on type; gray



Item No.: 248-501/000-023
Mini-WSB marking card; as card; not stretchable; plain; snap-on type; green



Item No.: 248-501/000-017
Mini-WSB marking card; as card; not stretchable; plain; snap-on type; light green



Item No.: 248-501/000-012
Mini-WSB marking card; as card; not stretchable; plain; snap-on type; orange



Item No.: 248-501/000-005
Mini-WSB marking card; as card; not stretchable; plain; snap-on type; red



Item No.: 248-501/000-024
Mini-WSB marking card; as card; not stretchable; plain; snap-on type; violet

Continued on next page

1.1.3.2 Marker



Item No.: 248-501
Mini-WSB marking card; as card; not stretchable; plain; snap-on type; white



Item No.: 248-501/000-002
Mini-WSB marking card; as card; not stretchable; plain; snap-on type; yellow

1.1.3.3 Marker carrier



Item No.: 750-103
Group marker carrier

1.1.4 Shield termination

1.1.4.1 Shield clamping saddles



Item No.: 790-108
Shield clamping saddle; 11 mm wide; diameter of compatible conductor; 3 … 8 mm



Item No.: 790-208
Shield clamping saddle; 12.4 mm wide; 3 … 8 mm



Item No.: 790-116
Shield clamping saddle; 19 mm wide; diameter of compatible conductor; 7 … 16 mm



Item No.: 790-216
Shield clamping saddle; 21.8 mm wide; 6 … 16 mm



Item No.: 790-124
Shield clamping saddle; 27 mm wide; diameter of compatible conductor; 6 … 24 mm



Item No.: 790-220
Shield clamping saddle; 30 mm wide; 6 … 20 mm



Item No.: 790-140
Shield clamping saddle; diameter of compatible conductor

1.1.6 System enclosure

1.1.6.1 System enclosure



Item No.: 850-825
IP65 enclosure; Aluminium (RAL 7032); WxHxD (160x100x160 mm); 9 x M12, 4 x M20



Item No.: 850-826
IP65 enclosure; Aluminium (RAL 7032); WxHxD (240x100x160 mm); 4 x M20, 4 x M16, 14 x M12 cable grip



Item No.: 850-827
IP65 enclosure; Aluminium (RAL 7032); WxHxD (320x100x160 mm); 4 x M20, 8 x M16, 17 x M12 cable grip



Item No.: 850-828
IP65 enclosure; Aluminium (RAL 7032); WxHxD (480x100x160 mm); 4 x M20, 10 x M16, 35 x M12 cable grip



Item No.: 850-826/002-000
IP65 enclosure; Aluminium (RAL 7035); WxHxD (240x100x160 mm); 4 x M20, 4 x M16, 14 x M12 cable grip



Item No.: 850-827/002-000
IP65 enclosure; Aluminium (RAL 7035); WxHxD (320x100x160 mm); 4 x M20, 8 x M16, 17 x M12 cable grip



Item No.: 850-828/002-000
IP65 enclosure; Aluminium (RAL 7035); WxHxD (480x100x160 mm); 4 x M20, 10 x M16, 35 x M12 cable grip



Item No.: 850-834
IP65 enclosure; Polyester (RAL 7032); WxHxD (164x100x164 mm); 9 x M12, 4 x M20



Item No.: 850-835
IP65 enclosure; Polyester (RAL 7032); WxHxD (244x100x164 mm); 4 x M20, 4 x M16, 14 x M12 cable grip



Item No.: 850-836
IP65 enclosure; Polyester (RAL 7032); WxHxD (324x100x164 mm); 4 x M20, 8 x M16, 17 x M12 cable grip



Item No.: 850-814/002-000
IP65 enclosure; Sheet steel (RAL 7035); WxHxD (200x120x200 mm); without flange plate



Item No.: 850-815/002-000
IP65 enclosure; Sheet steel (RAL 7035); WxHxD (300x120x200 mm); without flange plate



Item No.: 850-816/002-000
IP65 enclosure; Sheet steel (RAL 7035); WxHxD (400x120x200 mm); without flange plate



Item No.: 850-817/002-000
IP65 enclosure; Sheet steel (RAL 7035); WxHxD (600x120x200 mm); without flange plate