Data Sheet | Item Number: 750-8210/025-000

Controller PFC200; 2nd Generation; 4 x ETHERNET; Ext. Temperature

https://www.wago.com/750-8210/025-000



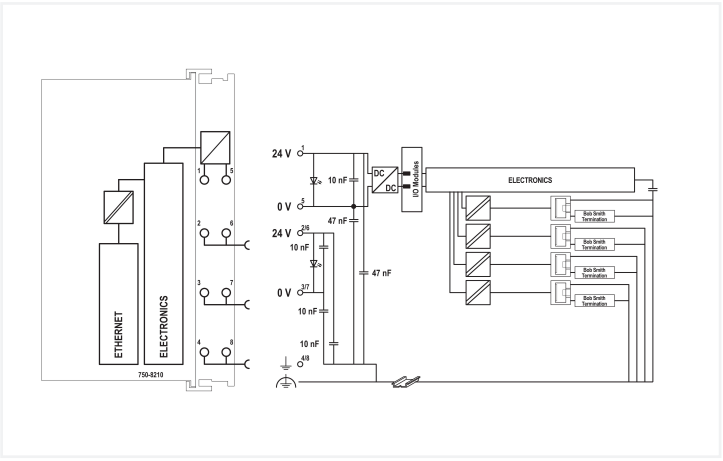

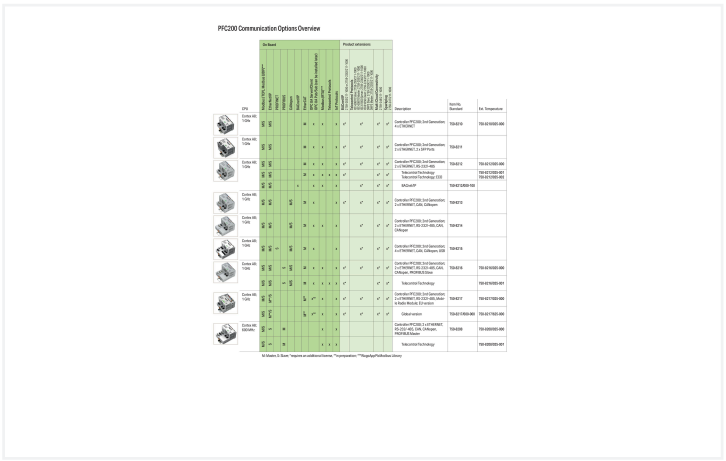

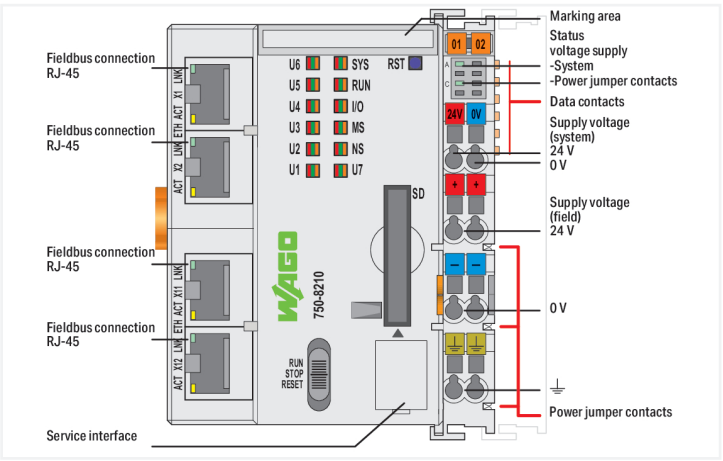

The PFC200 Controller is a compact PLC for the modular WAGO I/O System. Besides network and fieldbus interfaces, the controller supports all digital, analog and specialty modules found within the 750/753 Series.
Four ETHERNET interfaces and an integrated switch enable line topology wiring.
An integrated Webserver provides user configuration options, while displaying PFC200 status information.
Besides the processing industry and building automation, typical applications for the PFC200 include standard machinery and equipment control (e.g., packaging, bottling and manufacturing systems, as well as textile, metal and wood processing machines).

Advantages:

- Programming per IEC 61131-3
- Programmable with CODESYS V3.5 from Firmware Release 23, WAGO-I/O-PRO V2.3 or ***e!****COCKPIT* up to Firmware Release 22
- Direct connection of WAGO's I/O modules
- 4 x ETHERNET (configurable)
- Linux® operating system with PREEMPT_RT patch
- Configuration via CODESYS or Web-Based Management user interface
- Maintenance-free

Technical data

Communications	Modbus TCP master/slave Modbus (UDP), WagoAppPlcModbus Library Modbus (RTU), WagoAppPlcModbus Library ETHERNET EtherNet/IP™ Adapter (slave) EtherNet/IP™ Scanner EtherCAT® Master OPC UA Server/Client OPC UA Pub/Sub (can be installed later) MQTT BACnet/IP, **requires an additional license** Telecontrol protocols, **requires an additional license**
ETHERNET protocols	DHCP DNS NTP FTP FTPS SNMP HTTP HTTPS SSH
Telecontrol protocols	IEC 60870 (additional license as slave or master) IEC 61850 (additional license as Client or Server) DNP3 (additional license as Slave or Master)
Visualization	Web-Visu
Operating system	Real-time Linux (with PREEMPT_RT patch)
CPU	Cortex A8; 1 GHz
Programming languages per IEC 61131-3	Instruction List (IL) Ladder Diagram (LD) Function Block Diagram (FBD) Continuous Function Chart (CFC) Structured Text (ST) Sequential Function Chart (SFC)
Programming environment	CODESYS V3.5, Firmware Release 23 or higher ***e!****COCKPIT* (based on CODESYS V3) up to Firmware Release 22 WAGO-I/O-*PRO* V2.3 (based on CODESYS V2.3), up to Firmware Release 22
Configuration options	CODESYS V3 ***e!****COCKPIT* WAGO-I/O-*CHECK* Web-Based Management ***e!****RUNTIME* library CODESYS Library
Transmission rate	ETHERNET: 10/100 Mbit/s
Transmission medium (communication/fieldbus)	ETHERNET: Twisted pair S-UTP; 100 Ω; Cat. 5; 100 m maximum cable length
Main memory (RAM)	512 MB
Internal memory (flash)	4096 MB
Non-volatile hardware memory	128 KB
Program memory	CODESYS V2: 16 MB; CODESYS V3: 32 MB
Data memory	CODESYS V2: 64 MB; CODESYS V3: 128 MB
Non-volatile software memory	128 KB
Non-volatile software memory	128 KB
Type of memory card	SD and SDHC up to 32 GB (all guaranteed properties only valid with WAGO's memory card)
Memory Card Slot	Push-push mechanism; cover lid (sealable)
Number of modules per node (max.)	250
Number of modules without a bus extension (max.)	64
Input and output process image (internal) max.	1000 words/1000 words
Input and output process image (Modbus®) max.	CODESYS V2: 1000 words/1000 words; CODESYS V3: 32000 words/32000 words
Drift – system clock (25 °C)	20 ppm
Drift – Real Time Clock (25 °C)	3 ppm
RTC backup time (25 °C)	30 days
Indicators	LED (SYS, RUN, I/O, U1 ... U7) red/green/orange: Status of system, program, local data bus, status programmable by user (can be used via CODESYS library); LED (A, C) green: Status of system power supply, field supply
Supply voltage (system)	24 VDC, SELV/PELV (-25 ... +30 %); via wiring interface (CAGE CLAMP® connection); External fuse required: 2 A slow-blow
Input current (typ.) at nominal load (24 V)	550 mA
Total current (system supply)	1700 mA

Continued on next page

Technical data

Supply voltage (field)	24 VDC, SELV/PELV (-25 … +30 %); via power jumper contacts (supply via CAGE CLAMP® connection; distribution via spring contact); External fuse required: 10 A slow-blow
Current carrying capacity (power jumper contacts)	10 A
Number of outgoing power jumper contacts	3
Isolation	500 V system/field

Connection Data

Connection technology: communication/fieldbus	Modbus (TCP, UDP): 4 x RJ-45
Connection technology: system supply	2 x CAGE CLAMP®
Connection technology: field supply	6 x CAGE CLAMP®
Connectable conductor materials	Copper
Connection type	System/field supply
Solid conductor	0.08 … 2.5 mm² / 28 … 14 AWG
Fine-stranded conductor	0.08 … 2.5 mm² / 28 … 14 AWG
Strip length	8 … 9 mm / 0.31 … 0.35 inches
Connection technology: device configuration	1 x Male connector; 4-pole

Physical data

Width	78.6 mm / 3.094 inches
Height	100 mm / 3.937 inches
Depth	71.9 mm / 2.831 inches
Depth from upper-edge of DIN-rail	64.7 mm / 2.547 inches

Mechanical data

Mounting type	DIN-35 rail

Material data

Housing material	Polycarbonate; polyamide 6.6
Fire load	2.099 MJ
Weight	216.2 g
Conformity marking	CE

Environmental requirements

Ambient temperature (operation)	-20 … +60 °C
Ambient temperature (storage)	-40 … +85 °C
Protection type	IP20
Pollution degree	2 per IEC 61131-2
Operating altitude	without temperature derating: 0 … 2000 m; with temperature derating: 2000 … 5000 m (0.5 K/100 m); 5000 m (max.)
Mounting position	Horizontal left, horizontal right, horizontal top, horizontal bottom, vertical top and vertical bottom
Relative humidity (without condensation)	95 %
Vibration resistance	4g per IEC 60068-2-6
Shock resistance	15g per IEC 60068-2-27
EMC immunity to interference	per EN 61000-6-2, marine applications
EMC emission of interference	per EN 61000-6-3, marine applications
Exposure to pollutants	per IEC 60068-2-42 and IEC 60068-2-43
Permissible H_2S contaminant concentration at a relative humidity 75 %	10 ppm
Permissible SO_2 contaminant concentration at a relative humidity 75 %	25 ppm

Continued on next page

Data Act

Pre-contractual Information	Data-Act-750-Series-Controller

Commercial data

PU (SPU)	1 pcs
Packaging type	Box
Country of origin	DE
GTIN	4055143981156
Customs tariff number	85371091990

Product Classification

UNSPSC	32151705
ETIM 9.0	EC000236
ETIM 10.0	EC000236
ECCN	NO US CLASSIFICATION

Environmental Product Compliance

RoHS Compliance Status	Compliant,No Exemption
SCIP notification number (Austria)	1fb11c43-d0eb-4d24-9c77-732e0b0a4a4d
SCIP notification number (Belgium)	fa7bc339-ed12-4bf2-b748-ffd41a52be8c
SCIP notification number (Bulgaria)	8a609291-f9d9-450a-b26b-29bddc9074d7
SCIP notification number (Czech Republic)	8022f9bf-d398-4393-9d82-f15b261addd0
SCIP notification number (Denmark)	fd511ae9-edeb-4e1a-92af-78e5510fd3ef
SCIP notification number (Finland)	1e027263-a1a5-428a-bc19-bcc75a3e40f3
SCIP notification number (France)	c1889adb-d510-49c1-aea0-57d89fcf6832
SCIP notification number (Germany)	24686e9c-93ec-4b17-8f96-fbd2f1be1da3
SCIP notification number (Hungary)	09ea0929-a414-46c2-b23c-8b13f78cfaec
SCIP notification number (Italy)	f7c2317e-190b-4da8-b321-d5216e4f0105
SCIP notification number (Netherlands)	c9870d6b-1328-4939-83ee-9c91aff2e17d
SCIP notification number (Poland)	1cf268d3-8e51-47bd-8f10-ca2c05c5f245
SCIP notification number (Romania)	57faaa0d-5e3e-4871-8240-4eb7a74901fe
SCIP notification number (Sweden)	ee6d693e-bb79-42ae-a072-3701eed8117e

Approvals / Certificates

General approvals

Approval	Standard	Certificate Name
EAC GZO Almaty Standart	TP TC 020/2011	EAC CoC 03083
KC National Radio Research Agency	Article 58-2, Clause 3	MSIP-REM-W43-PFC750
UL Underwriters Laboratories Inc. (ORDINARY LOCATIONS)	-	E175199

Declarations of conformity and manufacturer's declarations

Approval	Standard	Certificate Name
EU-Declaration of Conformity WAGO GmbH & Co. KG	-	-
UK-Declaration of Conformity WAGO GmbH & Co. KG	-	-

Continued on next page

Approvals for marine applications

Approval	Standard	Certificate Name
BSH Bundesamt fuer Seeschiff-fahrt und Hydrographie	-	1104
DNV DNV Germany GmbH	DNV-CG-0339,Aug.2021	TAA00001J4
PRS Polski Rejestr Statków	-	TE/1102/880590/23

Downloads

Environmental Product Compliance

Compliance Search

Environmental Product Compliance 750-8210/025-000	

Documentation

Manual

Function Manual for PFC100 2nd Generation, PFC200 2nd Generation and PFC300	3621366155 | 5 | en-US | 2026-02-03 07:08 06.02.2026	pdf 2460.24 KB	
Product Manual PFC200; G2; 4ETH	2324826635 | 2 | en-US | 8/6/2024 10:00 07.08.2024	pdf 3335.59 KB	
System Manual Series 750/753			
Product Manual OPC UA Mapping Editor	V 1.1.0 11.03.2022	pdf 3314.23 KB	
OPC_UA Mapping Editor			
Migration Guide	2023631499 | 9 | en-US | 2026-01-15 14:41 20.01.2026	pdf 2705.60 KB	
Migrationsleitfaden von e!COCKPIT-Projekten zu CODESYS V3.5			

System Description

Overview on WAGO-I/O-SYSTEM 750 approvals	pdf 770.48 KB	
Controller PFC100/200, General Product Information	pdf 578.66 KB	

Additional Information

WAGO OPC UA Server	V 1.1.0 28.01.2021	pdf 1132.87 KB	

Bid Text

750-8210/025-000	xml 10.07 KB	
750-8210/025-000	docx 18.68 KB	

Continued on next page

CAD/CAE-Data

CAD data

2D/3D Models
750-8210/025-000

CAE data

EPLAN Data Portal
750-8210/025-000

ZUKEN Portal
750-8210/025-000

Engineering-Software

Configuration and Commissioning Software

WAGO Ethernet Settings		
(759-316) WAGO Ethernet Settings / Serie 750	06.18.01.01 02.09.2021	zip 26678.54 KB
WAGOupload	1.16.1.0 02.02.2022	zip 12111.45 KB

Runtime Software

Firmware

Image Update (SD Karte) PFC100/200 für Codesys V2.3 u. E!cockpit	V 22 SP1 12.12.2022	zip 205815.20 KB
PFC200, Firmware Update für CoDeSys V3.5	V 23 24.02.2023	zip 167985.38 KB
WUP Update (WAGOuploadTool) PFC100/200 Codesys V2.3 u. E!cockpit	V 22 SP1 12.12.2022	zip 203580.70 KB

System Software

CODESYS V3.5

1 Compatible Products

1.1 Product Expansions

1.1.1 Runtime software



Item No.: 2759-2283/211-1000
Runtime; BACnet; 300; M; Single License; Online activation



Item No.: 2759-2273/211-1000
Runtime; BACnet; 300; S; Single License; Online activation



Item No.: 2759-283/211-1000
Runtime; BACnet; 300; Single License; Online activation



Item No.: 2759-2293/211-1000
Runtime; DNP3 Master; M; Single License; Online activation



Item No.: 2759-2290/211-1000
Runtime; DNP3 Slave; Single License; Online activation



Item No.: 2759-293/211-1000
Runtime; IEC60870 Master; M; Single License; Online activation



Item No.: 2759-290/211-1000
Runtime; IEC60870 Slave; Single License; Online activation



Item No.: 2759-2243/211-1000
Runtime; IEC61850 Client; M; Single License; Online activation

Continued on next page

1.1.1 Runtime software



Item No.: 2759-2240/211-1000
Runtime; IEC61850 Server; Single License; Online activation



Item No.: 2759-248/211-1000
Runtime; Multi Cloud Connectivity; Single License; Online activation



Item No.: 2759-247/211-1000
Runtime; Sparkplug; Single License; Online activation

1.2 Optional Accessories

1.2.1 Cables and connectors

1.2.1.1 Connector plug



Item No.: 750-979/000-011
Connector ETHERNET; RJ-45; Cat. 6A; angled; Code T568A; AWG 22; Strain relief



Item No.: 750-979/000-021
Connector ETHERNET; RJ-45; Cat. 6A; angled; Code T568A; AWG 24; Strain relief



Item No.: 750-979/000-012
Connector ETHERNET; RJ-45; Cat. 6A; angled; Code T568B; AWG 22; Strain relief



Item No.: 750-979/000-022
Connector ETHERNET; RJ-45; Cat. 6A; angled; Code T568B; AWG 24; Strain relief



Item No.: 750-977/000-011
Connector ETHERNET; RJ-45; Cat. 6A; straight; Code T568A; AWG 22



Item No.: 750-978/000-011
Connector ETHERNET; RJ-45; Cat. 6A; straight; Code T568A; AWG 22; Strain relief



Item No.: 750-977/000-021
Connector ETHERNET; RJ-45; Cat. 6A; straight; Code T568A; AWG 24



Item No.: 750-978/000-021
Connector ETHERNET; RJ-45; Cat. 6A; straight; Code T568A; AWG 24; Strain relief



Item No.: 750-977/000-012
Connector ETHERNET; RJ-45; Cat. 6A; straight; Code T568B; AWG 22



Item No.: 750-978/000-012
Connector ETHERNET; RJ-45; Cat. 6A; straight; Code T568B; AWG 22; Strain relief



Item No.: 750-977/000-022
Connector ETHERNET; RJ-45; Cat. 6A; straight; Code T568B; AWG 24



Item No.: 750-978/000-022
Connector ETHERNET; RJ-45; Cat. 6A; straight; Code T568B; AWG 24; Strain relief



Item No.: 750-975
ETHERNET RJ-45 connector, IP20; ETHERNET 10/100 Mbit/s; for field assembly

1.2.2 Communication

1.2.2.1 Communication cable



Item No.: 750-923
Configuration cable; USB connector; Length: 2.5 m



Item No.: 750-923/000-001
Configuration cable; USB connector; Length: 5 m

1.2.3 DIN-rail

1.2.3.1 Mounting accessories



Item No.: 210-196
Aluminum carrier rail; 35 x 8.2 mm; 1.6 mm thick; 2 m long; unslotted; similar to EN 60715; silver-colored



Item No.: 210-198
Copper carrier rail; 35 x 15 mm; 2.3 mm thick; 2 m long; unslotted; according to EN 60715; copper-colored



Item No.: 210-197
Steel carrier rail; 35 x 15 mm; 1.5 mm thick; 2 m long; slotted; similar to EN 60715; silver-colored



Item No.: 210-114
Steel carrier rail; 35 x 15 mm; 1.5 mm thick; 2 m long; unslotted; similar to EN 60715; silver-colored



Item No.: 210-118
Steel carrier rail; 35 x 15 mm; 2.3 mm thick; 2 m long; unslotted; according to EN 60715; silver-colored



Item No.: 210-115
Steel carrier rail; 35 x 7.5 mm; 1 mm thick; 2 m long; slotted; according to EN 60715; "Hole width 18 mm; silver-colored



Item No.: 210-112
Steel carrier rail; 35 x 7.5 mm; 1 mm thick; 2 m long; slotted; according to EN 60715; "Hole width 25 mm; silver-colored



Item No.: 210-113
Steel carrier rail; 35 x 7.5 mm; 1 mm thick; 2 m long; unslotted; according to EN 60715; silver-colored

1.2.4 Marking

1.2.4.1 Group marker carrier



Item No.: 750-107
Group marker carrier

1.2.4.2 Marker

Item No.: 2009-145/000-006
Mini-WSB Inline; for Smart Printer; 1700 pieces on roll; stretchable 5 - 5.2 mm; plain; snap-on type; blue

Item No.: 2009-145/000-007
Mini-WSB Inline; for Smart Printer; 1700 pieces on roll; stretchable 5 - 5.2 mm; plain; snap-on type; gray

Item No.: 2009-145/000-023
Mini-WSB Inline; for Smart Printer; 1700 pieces on roll; stretchable 5 - 5.2 mm; plain; snap-on type; green

Item No.: 2009-145/000-012
Mini-WSB Inline; for Smart Printer; 1700 pieces on roll; stretchable 5 - 5.2 mm; plain; snap-on type; orange

Item No.: 2009-145/000-005
Mini-WSB Inline; for Smart Printer; 1700 pieces on roll; stretchable 5 - 5.2 mm; plain; snap-on type; red

Item No.: 2009-145/000-024
Mini-WSB Inline; for Smart Printer; 1700 pieces on roll; stretchable 5 - 5.2 mm; plain; snap-on type; violet

Item No.: 2009-145
Mini-WSB Inline; for Smart Printer; 1700 pieces on roll; stretchable 5 - 5.2 mm; plain; snap-on type; white

Item No.: 2009-145/000-002
Mini-WSB Inline; for Smart Printer; 1700 pieces on roll; stretchable 5 - 5.2 mm; plain; snap-on type; yellow



Item No.: 248-501/000-006
Mini-WSB marking card; as card; not stretchable; plain; snap-on type; blue



Item No.: 248-501/000-007
Mini-WSB marking card; as card; not stretchable; plain; snap-on type; gray



Item No.: 248-501/000-023
Mini-WSB marking card; as card; not stretchable; plain; snap-on type; green



Item No.: 248-501/000-017
Mini-WSB marking card; as card; not stretchable; plain; snap-on type; light green



Item No.: 248-501/000-012
Mini-WSB marking card; as card; not stretchable; plain; snap-on type; orange



Item No.: 248-501/000-005
Mini-WSB marking card; as card; not stretchable; plain; snap-on type; red



Item No.: 248-501/000-024
Mini-WSB marking card; as card; not stretchable; plain; snap-on type; violet



Item No.: 248-501
Mini-WSB marking card; as card; not stretchable; plain; snap-on type; white



Item No.: 248-501/000-002
Mini-WSB marking card; as card; not stretchable; plain; snap-on type; yellow

1.2.4.3 Marker carrier



Item No.: 750-103
Group marker carrier

1.2.5 Memory card

1.2.5.1 Memory card

Item No.: 758-879/000-2116
Memory Card SD; pSLC-NAND; 16 GB; Temperature range: -40 to 85°C

1.2.6 Shield termination

1.2.6.1 Shield clamping saddles



Item No.: 790-108
Shield clamping saddle; 11 mm wide; diameter of compatible conductor; 3 … 8 mm



Item No.: 790-208
Shield clamping saddle; 12.4 mm wide; 3 … 8 mm



Item No.: 790-116
Shield clamping saddle; 19 mm wide; diameter of compatible conductor; 7 … 16 mm



Item No.: 790-216
Shield clamping saddle; 21.8 mm wide; 6 … 16 mm



Item No.: 790-124
Shield clamping saddle; 27 mm wide; diameter of compatible conductor; 6 … 24 mm



Item No.: 790-220
Shield clamping saddle; 30 mm wide; 6 … 20 mm



Item No.: 790-140
Shield clamping saddle; diameter of compatible conductor

1.2.7 Software

1.2.7.1 Software Application

Item No.: 2759-2015/261-1000
Application Grid Gateway; Operator; Single License; Online activation



Item No.: 2759-245/211-1000
Library Controller Redundancy Master; Single License; Online activation

1.2.8 System enclosure

1.2.8.1 System enclosure



Item No.: 850-825
IP65 enclosure; Aluminium (RAL 7032); WxHxD (160x100x160 mm); 9 x M12, 4 x M20



Item No.: 850-826
IP65 enclosure; Aluminium (RAL 7032); WxHxD (240x100x160 mm); 4 x M20, 4 x M16, 14 x M12 cable grip



Item No.: 850-827
IP65 enclosure; Aluminium (RAL 7032); WxHxD (320x100x160 mm); 4 x M20, 8 x M16, 17 x M12 cable grip



Item No.: 850-828
IP65 enclosure; Aluminium (RAL 7032); WxHxD (480x100x160 mm); 4 x M20, 10 x M16, 35 x M12 cable grip



Item No.: 850-826/002-000
IP65 enclosure; Aluminium (RAL 7035); WxHxD (240x100x160 mm); 4 x M20, 4 x M16, 14 x M12 cable grip



Item No.: 850-827/002-000
IP65 enclosure; Aluminium (RAL 7035); WxHxD (320x100x160 mm); 4 x M20, 8 x M16, 17 x M12 cable grip



Item No.: 850-828/002-000
IP65 enclosure; Aluminium (RAL 7035); WxHxD (480x100x160 mm); 4 x M20, 10 x M16, 35 x M12 cable grip



Item No.: 850-834
IP65 enclosure; Polyester (RAL 7032); WxHxD (164x100x164 mm); 9 x M12, 4 x M20



Item No.: 850-835
IP65 enclosure; Polyester (RAL 7032); WxHxD (244x100x164 mm); 4 x M20, 4 x M16, 14 x M12 cable grip



Item No.: 850-836
IP65 enclosure; Polyester (RAL 7032); WxHxD (324x100x164 mm); 4 x M20, 8 x M16, 17 x M12 cable grip



Item No.: 850-814/002-000
IP65 enclosure; Sheet steel (RAL 7035); WxHxD (200x120x200 mm); without flange plate



Item No.: 850-815/002-000
IP65 enclosure; Sheet steel (RAL 7035); WxHxD (300x120x200 mm); without flange plate



Item No.: 850-816/002-000
IP65 enclosure; Sheet steel (RAL 7035); WxHxD (400x120x200 mm); without flange plate



Item No.: 850-817/002-000
IP65 enclosure; Sheet steel (RAL 7035); WxHxD (600x120x200 mm); without flange plate