Data Sheet | Item Number: 753-400

2-channel digital input; 24 VDC; 3 ms

https://www.wago.com/753-400

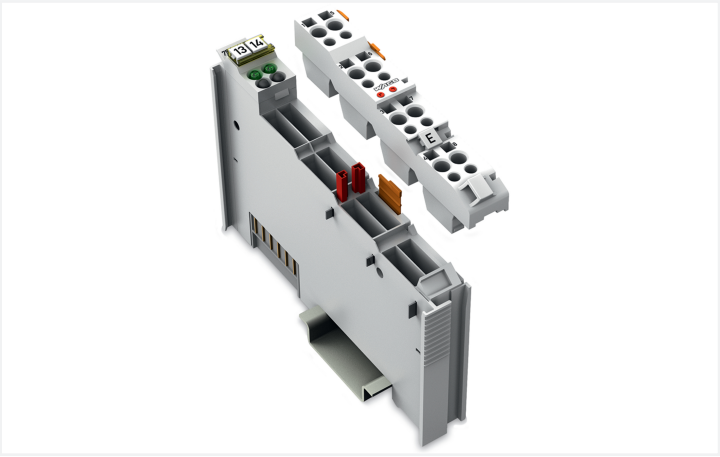

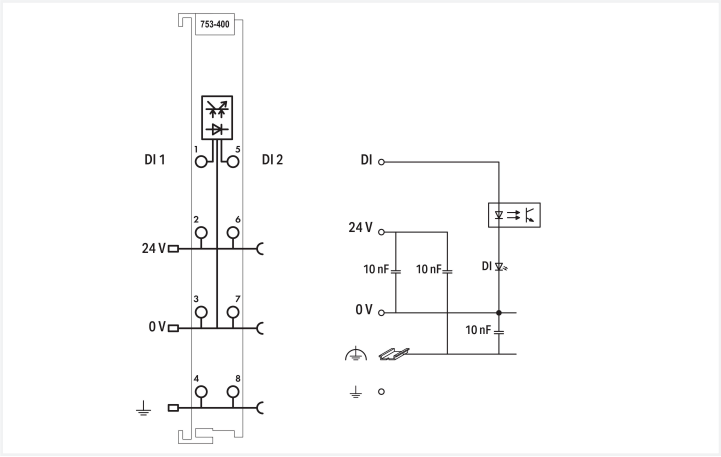

Color: light gray

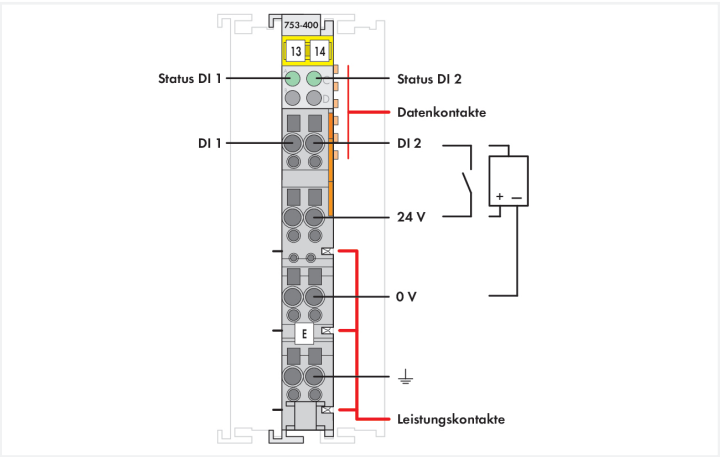

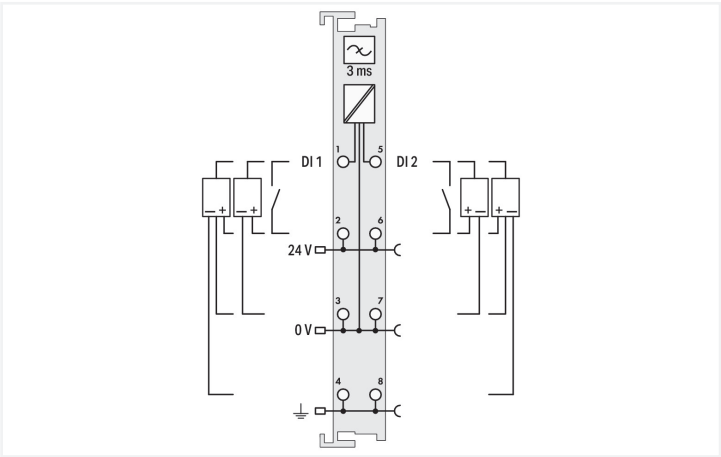

This digital input module receives control signals from field devices (e.g., sensors).
Each input module has a noise-rejection filter.
Field and system levels are electrically isolated.

Notes	
Note	Pluggable connectors and coding fingers (753 Series) are not included.

Technical data	
Number of digital inputs	2
Total number of channels (module)	2
Signal type	Digital
Signal type (voltage)	24 VDC
Sensor connection	2 x (2-wire, 3-wire, 4-wire)
Input characteristic	high-side switching
Input filter	3 ms
Input current per channel for signal (1) typ.	4.5 mA
Voltage range for signal (0)	–3 … +5 VDC
Voltage range for signal (1)	15 … 30 VDC
Sensor supply	24 VDC

Technical data

Input data width (internal) max.	2 bits
Supply voltage (system)	5 VDC; via data contacts
Current consumption (system supply)	3.7 mA
Supply voltage (field)	24 VDC (-25 … +30 %); via power jumper contacts (power supply via blade contact; transmission (field side supply voltage only) via spring contact)
Isolation	500 V system/field
Indicators	LED (A, C) green: Status DI 1, DI 2
Number of incoming power jumper contacts	3
Number of outgoing power jumper contacts	3
Current carrying capacity (power jumper contacts)	10 A

Connection Data

Connection technology: I/O	8 x CAGE CLAMP® (inputs)
Connectable conductor materials	Copper
Connection type	Input
Solid conductor	0.08 … 2.5 mm² / 28 … 14 AWG
Fine-stranded conductor	0.08 … 2.5 mm² / 28 … 14 AWG
Strip length	9 … 10 mm / 0.35 … 0.39 inches

Physical data

Width	12 mm / 0.472 inches
Height	100 mm / 3.937 inches
Depth	69.8 mm / 2.748 inches
Depth from upper-edge of DIN-rail	62.6 mm / 2.465 inches

Mechanical data

Mounting type	DIN-35 rail
Pluggable connector	pluggable

Material data

Color	light gray
Housing material	Polycarbonate; polyamide 6.6
Fire load	0.95 MJ
Weight	37 g
Conformity marking	CE

Environmental requirements

Ambient temperature (operation)	0 … +55 °C
Ambient temperature (storage)	-40 … +85 °C
Protection type	IP20
Pollution degree	2 per IEC 61131-2
Operating altitude	0 … 2000 m / 0 … 6562 ft
Mounting position	Horizontal left, horizontal right, horizontal top, horizontal bottom, vertical top and vertical bottom
Relative humidity (without condensation)	95 %
Vibration resistance	4g per IEC 60068-2-6
Shock resistance	15g per IEC 60068-2-27
EMC immunity to interference	per EN 61000-6-2, marine applications
EMC emission of interference	per EN 61000-6-4, marine applications
Exposure to pollutants	per IEC 60068-2-42 and IEC 60068-2-43
Permissible H_2S contaminant concentration at a relative humidity 75 %	10 ppm
Permissible SO_2 contaminant concentration at a relative humidity 75 %	25 ppm

Continued on next page

Commercial data

Product Group	15 (I/O System)
PU (SPU)	1 pcs
Packaging type	Box
Country of origin	DE
GTIN	4045454424312
Customs tariff number	85176200000

Product Classification

UNSPSC	32151705
eCl@ss 10.0	27-24-26-04
eCl@ss 9.0	27-24-26-04
ETIM 9.0	EC001599
ETIM 10.0	EC001599
ECCN	NO US CLASSIFICATION

Environmental Product Compliance

CAS-No.	1303-86-2 1317-36-8 7439-92-1
REACH Candidate List Substance	Diboron trioxide Lead Lead monoxide
RoHS Compliance Status	Compliant,With Exemption
RoHS Exemption	6(c) 7(a) 7(c)-I 7(c)-II
SCIP notification number (Austria)	3a452de4-ff48-4a13-9cfc-9c5e0c10737e
SCIP notification number (Belgium)	4e047b96-4228-46c1-a2ba-8ce22a5575da
SCIP notification number (Bulgaria)	1fdfe5b4-466d-43ec-b7c8-1ae8e4c79230
SCIP notification number (Czech Republic)	fe5da6cb-f219-4dcd-baa5-3e3385e7344b
SCIP notification number (Denmark)	6f03b2ec-a1f2-4364-950f-9c3e913e5105
SCIP notification number (Finland)	1fbc6837-20cf-43a9-a351-5d23b95031b9
SCIP notification number (France)	e687c212-5c0d-4ab6-97a4-fcabb20a32f2
SCIP notification number (Germany)	2546325f-c9a3-4262-984c-a60a9baaea17
SCIP notification number (Hungary)	c9f402b3-f9df-4163-803f-28277175a6f4
SCIP notification number (Italy)	d2525f43-757b-41ba-9218-d81d62bd4d5a
SCIP notification number (Netherlands)	8e0400d7-554b-4751-867f-0e3712ba36b6
SCIP notification number (Poland)	bdf81789-e93a-4f5e-8f9d-7f4a49dbbf5d
SCIP notification number (Romania)	5fe9dbfb-fdf5-44bd-8f7e-24f31fd9eb99
SCIP notification number (Sweden)	7f2855e4-45e3-457c-a016-1147e58a19b7

Approvals / Certificates

General approvals

Approval	Standard	Certificate Name
EAC GZO Almaty Standart	TP TC 020/2011	EAC CoC 03083
KC National Radio Research Agency	Article 58-2, Clause 3	MSIP-REM-W43-DIM750

General approvals

UL Underwriters Laboratories Inc. (ORDINARY LOCATIONS)	UL 508	E175199

Continued on next page

Declarations of conformity and manufacturer's declarations

Approval	Standard	Certificate Name
EU-Declaration of Conformity WAGO GmbH & Co. KG	-	-
UK-Declaration of Conformity WAGO GmbH & Co. KG	-	-

Approvals for marine applications

Approval	Standard	Certificate Name
ABS American Bureau of Shipping	-	25-0415412
BSH Bundesamt fuer Seeschiffahrt und Hydrographie	-	1104
BV Bureau Veritas S.A.	-	13453/E0 BV
DNV DNV GL SE	DNV-CG-0339,Aug.2021	TAA0000194
KR Korean Register of Shipping	-	KR HMB05880-AC001
LR Lloyds Register EMEA	-	LR22180952TA
PRS Polski Rejestr Statków	-	TE/1101/880590/23
RINA RINA Germany GmbH	-	ELE343521XG001

Approvals for hazardous areas

Approval	Standard	Certificate Name
ATEX TUEV Nord Cert GmbH	EN 60079-0	TUEV14ATEX148929X (II 3 G Ex ec IIC T4 Gc)
CCCEx CQST/CNEx	CNCA-C23-01	2020312310000213 (Ex ec IIC T4 Gc)
IECEx TUEV Nord Cert GmbH	IEC 60079-0	IECEx TUN 14.0035 X (Ex ec IIC T4 Gc)
INMETRO TÜV Rheinland do Brasil Ltda.	IEC 60079-0	TÜV 12.1297 X
UKEx WAGO GmbH & Co. KG	EN 60079-0	UKCA_WA GO22UKEX003X_ec
UL Underwriters Laboratories Inc. (HAZARDOUS LOCATIONS)	UL 121201	E198726

Continued on next page

Downloads

Environmental Product Compliance

Compliance Search

Environmental Product Compliance 753-400

Documentation

Manual

Product Manual 2-channel, 24VDC, 3.0ms	5389395339 | 3 | en-US | 2026-06-10 09:56 12.06.2026	pdf 912.20 KB
System Manual Series 750/753		

System Description

750/753 Series I/O-System – General Product Information		pdf 953.35 KB
Overview on WAGO-I/O-SYSTEM 750 approvals		pdf 770.48 KB

Bid Text

753-400	19.02.2019	xml 4.39 KB
753-400	13.07.2017	doc 25.50 KB

Instruction Leaflet

CCC Ex (Additional information)	26.04.2023	pdf 159.76 KB

CAD/CAE-Data

CAD data

2D/3D Models 753-400

CAE data

EPLAN Data Portal 753-400

WSCAD Universe 753-400

ZUKEN Portal 753-400

1 Compatible Products

1.1 Required Accessories

1.1.1 Pluggable connector

1.1.1.1 Male connector/plug



Item No.: 753-110
Plug

1.2 Optional Accessories

1.2.1 DIN-rail

1.2.1.1 Mounting accessories



Item No.: 210-196
Aluminum carrier rail; 35 x 8.2 mm; 1.6 mm thick; 2 m long; unslotted; similar to EN 60715; silver-colored



Item No.: 210-198
Copper carrier rail; 35 x 15 mm; 2.3 mm thick; 2 m long; unslotted; according to EN 60715; copper-colored



Item No.: 210-197
Steel carrier rail; 35 x 15 mm; 1.5 mm thick; 2 m long; slotted; similar to EN 60715; silver-colored



Item No.: 210-114
Steel carrier rail; 35 x 15 mm; 1.5 mm thick; 2 m long; unslotted; similar to EN 60715; silver-colored



Item No.: 210-118
Steel carrier rail; 35 x 15 mm; 2.3 mm thick; 2 m long; unslotted; according to EN 60715; silver-colored



Item No.: 210-115
Steel carrier rail; 35 x 7.5 mm; 1 mm thick; 2 m long; slotted; according to EN 60715; "Hole width 18 mm; silver-colored



Item No.: 210-112
Steel carrier rail; 35 x 7.5 mm; 1 mm thick; 2 m long; slotted; according to EN 60715; "Hole width 25 mm; silver-colored



Item No.: 210-113
Steel carrier rail; 35 x 7.5 mm; 1 mm thick; 2 m long; unslotted; according to EN 60715; silver-colored

1.2.2 Marking

1.2.2.1 Group marker carrier



Item No.: 750-106
Group marker carrier

1.2.2.2 Marker



Item No.: 750-100
Marker card; as a DIN A4 sheet; plain



Item No.: 2009-145/000-006
Mini-WSB Inline; for Smart Printer; 1700 pieces on roll; stretchable 5 - 5.2 mm; plain; snap-on type; blue



Item No.: 2009-145/000-007
Mini-WSB Inline; for Smart Printer; 1700 pieces on roll; stretchable 5 - 5.2 mm; plain; snap-on type; gray



Item No.: 2009-145/000-023
Mini-WSB Inline; for Smart Printer; 1700 pieces on roll; stretchable 5 - 5.2 mm; plain; snap-on type; green



Item No.: 2009-145/000-012
Mini-WSB Inline; for Smart Printer; 1700 pieces on roll; stretchable 5 - 5.2 mm; plain; snap-on type; orange



Item No.: 2009-145/000-005
Mini-WSB Inline; for Smart Printer; 1700 pieces on roll; stretchable 5 - 5.2 mm; plain; snap-on type; red



Item No.: 2009-145/000-024
Mini-WSB Inline; for Smart Printer; 1700 pieces on roll; stretchable 5 - 5.2 mm; plain; snap-on type; violet



Item No.: 2009-145
Mini-WSB Inline; for Smart Printer; 1700 pieces on roll; stretchable 5 - 5.2 mm; plain; snap-on type; white



Item No.: 2009-145/000-002
Mini-WSB Inline; for Smart Printer; 1700 pieces on roll; stretchable 5 - 5.2 mm; plain; snap-on type; yellow



Item No.: 248-501/000-006
Mini-WSB marking card; as card; not stretchable; plain; snap-on type; blue



Item No.: 248-501/000-007
Mini-WSB marking card; as card; not stretchable; plain; snap-on type; gray



Item No.: 248-501/000-023
Mini-WSB marking card; as card; not stretchable; plain; snap-on type; green



Item No.: 248-501/000-017
Mini-WSB marking card; as card; not stretchable; plain; snap-on type; light green



Item No.: 248-501/000-012
Mini-WSB marking card; as card; not stretchable; plain; snap-on type; orange



Item No.: 248-501/000-005
Mini-WSB marking card; as card; not stretchable; plain; snap-on type; red



Item No.: 248-501/000-024
Mini-WSB marking card; as card; not stretchable; plain; snap-on type; violet



Item No.: 248-501
Mini-WSB marking card; as card; not stretchable; plain; snap-on type; white



Item No.: 248-501/000-002
Mini-WSB marking card; as card; not stretchable; plain; snap-on type; yellow

Continued on next page

1.2.2.3 Marker carrier



Item No.: 750-103
Group marker carrier

1.2.3 Pluggable connector

1.2.3.1 Coding



Item No.: 753-150
753 Series coding elements

1.2.4 Shield termination

1.2.4.1 Shield clamping saddles



Item No.: 790-108
Shield clamping saddle; 11 mm wide; diameter of compatible conductor; 3 … 8 mm



Item No.: 790-208
Shield clamping saddle; 12.4 mm wide; 3 … 8 mm



Item No.: 790-116
Shield clamping saddle; 19 mm wide; diameter of compatible conductor; 7 … 16 mm



Item No.: 790-216
Shield clamping saddle; 21.8 mm wide; 6 … 16 mm



Item No.: 790-124
Shield clamping saddle; 27 mm wide; diameter of compatible conductor; 6 … 24 mm



Item No.: 790-220
Shield clamping saddle; 30 mm wide; 6 … 20 mm



Item No.: 790-140
Shield clamping saddle; diameter of compatible conductor

1.2.5 Supply module

1.2.5.1 Supply module



Item No.: 750-612
Power Supply; 0 … 230 V AC/DC



Item No.: 753-612
Power Supply; 0 … 230 V AC/DC



Item No.: 750-602
Power Supply; 24 VDC



Item No.: 753-602
Power Supply; 24 VDC



Item No.: 750-601
Power Supply; 24 VDC; fuse holder



Item No.: 750-610
Power Supply; 24 VDC; fuse holder; Diagnostics

1.2.6 System enclosure

1.2.6.1 System enclosure



Item No.: 850-825
IP65 enclosure; Aluminium (RAL 7032); WxHxD (160x100x160 mm); 9 x M12, 4 x M20



Item No.: 850-826
IP65 enclosure; Aluminium (RAL 7032); WxHxD (240x100x160 mm); 4 x M20, 4 x M16, 14 x M12 cable grip



Item No.: 850-827
IP65 enclosure; Aluminium (RAL 7032); WxHxD (320x100x160 mm); 4 x M20, 8 x M16, 17 x M12 cable grip



Item No.: 850-828
IP65 enclosure; Aluminium (RAL 7032); WxHxD (480x100x160 mm); 4 x M20, 10 x M16, 35 x M12 cable grip



Item No.: 850-826/002-000
IP65 enclosure; Aluminium (RAL 7035); WxHxD (240x100x160 mm); 4 x M20, 4 x M16, 14 x M12 cable grip



Item No.: 850-827/002-000
IP65 enclosure; Aluminium (RAL 7035); WxHxD (320x100x160 mm); 4 x M20, 8 x M16, 17 x M12 cable grip



Item No.: 850-828/002-000
IP65 enclosure; Aluminium (RAL 7035); WxHxD (480x100x160 mm); 4 x M20, 10 x M16, 35 x M12 cable grip



Item No.: 850-834
IP65 enclosure; Polyester (RAL 7032); WxHxD (164x100x164 mm); 9 x M12, 4 x M20

Continued on next page

1.2.6.1 System enclosure



Item No.: 850-835
IP65 enclosure; Polyester (RAL 7032); WxHxD (244x100x164 mm); 4 x M20, 4 x M16, 14 x M12 cable grip



Item No.: 850-836
IP65 enclosure; Polyester (RAL 7032); WxHxD (324x100x164 mm); 4 x M20, 8 x M16, 17 x M12 cable grip



Item No.: 850-814/002-000
IP65 enclosure; Sheet steel (RAL 7035); WxHxD (200x120x200 mm); without flange plate



Item No.: 850-815/002-000
IP65 enclosure; Sheet steel (RAL 7035); WxHxD (300x120x200 mm); without flange plate



Item No.: 850-816/002-000
IP65 enclosure; Sheet steel (RAL 7035); WxHxD (400x120x200 mm); without flange plate



Item No.: 850-817/002-000
IP65 enclosure; Sheet steel (RAL 7035); WxHxD (600x120x200 mm); without flange plate