Data Sheet | Item Number: 753-427

2-channel digital input; 110 VDC

https://www.wago.com/753-427

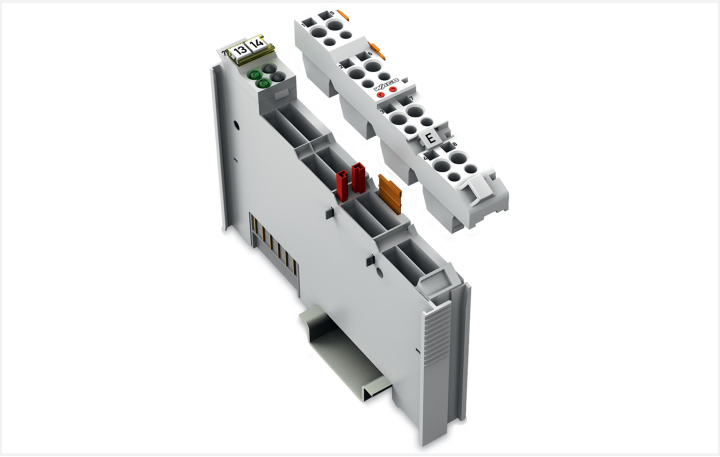

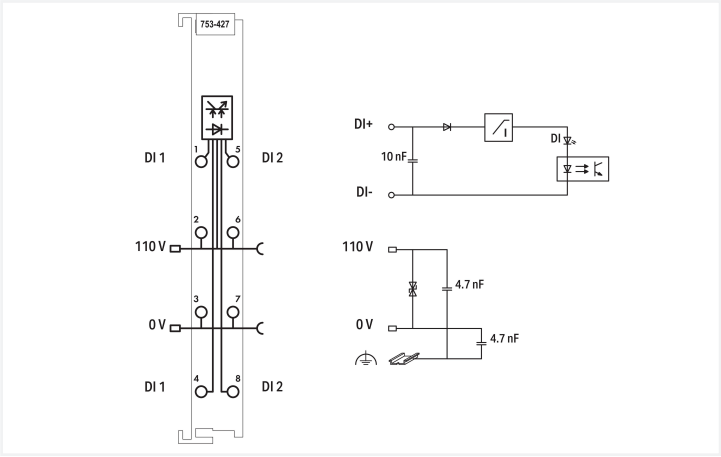

Color: light gray

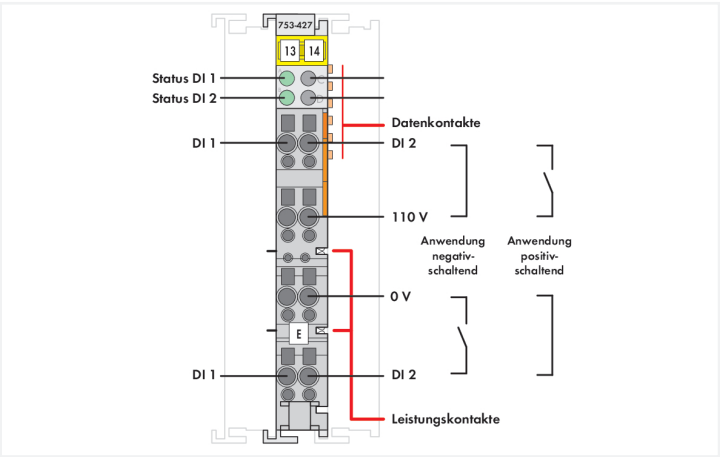

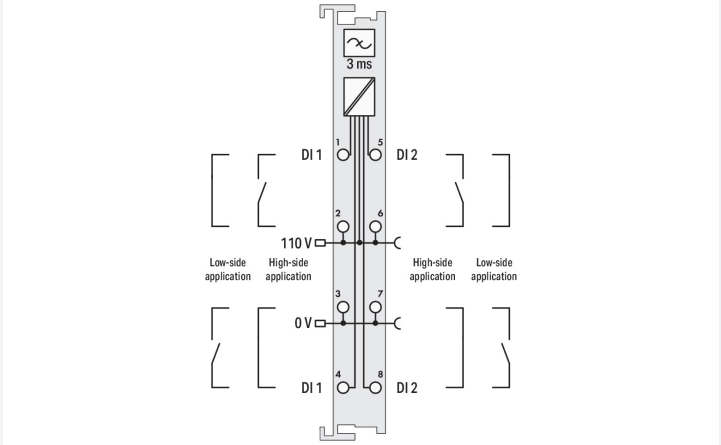

This digital input module receives control signals from field devices (e.g., sensors).
The module features two channels. Each channel can be used as a high-side or low-side switching input.
Field and system levels are electrically isolated.
Notice: An additional supply module must be added for 110 VDC supply!

Notes	
Note	Pluggable connectors and coding fingers (753 Series) are not included.

Technical data	
Number of digital inputs	2
Total number of channels (module)	2
Signal type	Digital
Signal type (voltage)	110 VDC
Sensor connection	2 x (2-wire)
Input characteristic	high-side/low-side switching, configurable
Input filter	3 ms
Input current per channel for signal (1) typ.	2.5 mA
Voltage range for signal (0)	–14 … +50 VDC
Voltage range for signal (1)	70 … 143 VDC

Continued on next page

Technical data

Sensor supply	110 VDC
Input data width (internal) max.	2 bits
Supply voltage (system)	5 VDC; via data contacts
Current consumption (system supply)	2.5 mA
Supply voltage (field)	110 VDC (-20 … +25 %); via power jumper contacts (power supply via blade contact; transmission (field side supply voltage only) via spring contact)
Isolation	1500 V (system/field)
Indicators	LED (A, B) green: Status DI 1, DI 2
Number of incoming power jumper contacts	2
Number of outgoing power jumper contacts	2
Current carrying capacity (power jumper contacts)	10 A

Connection Data

Connection technology: I/O	8 x CAGE CLAMP® (inputs)
Connectable conductor materials	Copper
Connection type	Input
Solid conductor	0.08 … 2.5 mm² / 28 … 14 AWG
Fine-stranded conductor	0.08 … 2.5 mm² / 28 … 14 AWG
Strip length	9 … 10 mm / 0.35 … 0.39 inches

Physical data

Width	12 mm / 0.472 inches
Height	100 mm / 3.937 inches
Depth	69.8 mm / 2.748 inches
Depth from upper-edge of DIN-rail	62.6 mm / 2.465 inches

Mechanical data

Mounting type	DIN-35 rail
Pluggable connector	pluggable

Material data

Color	light gray
Housing material	Polycarbonate; polyamide 6.6
Fire load	0.77 MJ
Weight	41.8 g
Conformity marking	CE

Environmental requirements

Ambient temperature (operation)	0 … +55 °C
Ambient temperature (storage)	-40 … +85 °C
Protection type	IP20
Pollution degree	2 per IEC 61131-2
Operating altitude	0 … 2000 m / 0 … 6562 ft
Mounting position	Horizontal left, horizontal right, horizontal top, horizontal bottom, vertical top and vertical bottom
Relative humidity (without condensation)	95 %
Vibration resistance	Per IEC 60068-2-6
Shock resistance	15g per IEC 60068-2-27
EMC immunity to interference	per EN 61000-6-2
EMC emission of interference	per EN 61000-6-3
Exposure to pollutants	per IEC 60068-2-42 and IEC 60068-2-43
Permissible H_2S contaminant concentration at a relative humidity 75 %	10 ppm

Continued on next page

Environmental requirements

Permissible SO_2 contaminant concentration at a relative humidity 75 %	25 ppm

Commercial data

Product Group	15 (I/O System)
PU (SPU)	1 pcs
Packaging type	Box
Country of origin	DE
GTIN	4045454540197
Customs tariff number	85176200000

Product Classification

UNSPSC	32151705
eCl@ss 10.0	27-24-26-04
eCl@ss 9.0	27-24-26-04
ETIM 9.0	EC001599
ETIM 10.0	EC001599
ECCN	NO US CLASSIFICATION

Environmental Product Compliance

CAS-No.	1303-86-2 1317-36-8 25550-51-0 7439-92-1 79-94-7
REACH Candidate List Substance	2,2',6,6'-tetrabromo-4,4'-isopropylidenediphenol 4-Methyl-1,2-cyclohexanedicarboxylic anhydride Diboron trioxide Lead Lead monoxide
RoHS Compliance Status	Compliant,With Exemption
RoHS Exemption	7(c)-I
SCIP notification number (Austria)	ccf6de02-2377-4f8c-aa60-85acb525809a
SCIP notification number (Belgium)	93e72809-cee2-465d-b172-b9da8a9a8d8e
SCIP notification number (Bulgaria)	508519da-f7da-4f07-b561-9a272aac3104
SCIP notification number (Czech Republic)	7edb59b3-fc33-4f0b-850f-99cd75371a81
SCIP notification number (Denmark)	d2001933-1726-4dde-95ea-4e618ad66253
SCIP notification number (Finland)	ee4cfc79-519e-41fb-a1ab-53d892fcce27
SCIP notification number (France)	1c3ce531-698b-43c1-834d-98b5780b3af0
SCIP notification number (Germany)	bacd3ba1-0175-40dd-a5c7-9755412ef3a8
SCIP notification number (Hungary)	168049b1-3cbe-4e7c-b198-58e3b06837b3
SCIP notification number (Italy)	16ff19d2-91f6-4943-bfe5-f2c4362ada77
SCIP notification number (Netherlands)	7fb17ad3-23f5-4150-aa2b-aba4a07a23f1
SCIP notification number (Poland)	1596e08a-4b81-4427-97d5-72f33390eb6b
SCIP notification number (Romania)	fa314912-60af-4beb-94e9-309a0b7bbf21
SCIP notification number (Sweden)	c7bb323d-e769-4ced-8a05-fb542ce942e1

Continued on next page

Approvals / Certificates

General approvals

Approval	Standard	Certificate Name
EAC GZO Almaty Standart	TP TC 020/2011	EAC CoC 03083
EAC GZO Almaty Standart	TP TC 004/2011	EAC CoC 03084
KC National Radio Research Agency	Article 58-2, Clause 3	MSIP-REM-W43-DIM750
UL Underwriters Laboratories Inc. (ORDINARY LOCATIONS)	UL 508	E175199

Approvals for hazardous areas

Approval	Standard	Certificate Name
ATEX TUEV Nord Cert GmbH	EN 60079-0	TUEV14ATEX148929X (II 3 G Ex ec IIC T4 Gc)
CCCEx CQST/CNEx	CNCA-C23-01	2020312310000213 (Ex ec IIC T4 Gc)
IECEx TUEV Nord Cert GmbH	IEC 60079-0	IECEx TUN 14.0035 X (Ex ec IIC T4 Gc)
INMETRO TÜV Rheinland do Brasil Ltda.	IEC 60079-0	TÜV 12.1297 X
UKEx WAGO GmbH & Co. KG	EN 60079-0	UKCA_WA GO22UKEX003X_ec
UL Underwriters Laboratories Inc. (HAZARDOUS LOCATIONS)	UL 121201	E198726

Downloads

Environmental Product Compliance

Compliance Search

Environmental Product Compliance 753-427

Documentation

Manual

Product Manual 2-channel, 110VDC	5691549067 | 1 | en-US | 2026-04-23 15:26 01.09.2026	pdf 2144.47 KB
System Manual Series 750/753		

System Description

750/753 Series I/O-System – General Product Information		pdf 953.35 KB
Overview on WAGO-I/O-SYSTEM 750 approvals		pdf 770.48 KB

Bid Text

753-427	19.02.2019	xml 4.53 KB
753-427	13.07.2017	doc 28.00 KB

Instruction Leaflet

CCC Ex (Additional information)	26.04.2023	pdf 159.76 KB

Continued on next page

CAD/CAE-Data

CAD data	CAE data
2D/3D Models 753-427	EPLAN Data Portal 753-427
	WSCAD Universe 753-427
	ZUKEN Portal 753-427

1 Compatible Products

1.1 Required Accessories

1.1.1 Pluggable connector

1.1.1.1 Male connector/plug



Item No.: 753-110
Plug

1.2 Optional Accessories

1.2.1 DIN-rail

1.2.1.1 Mounting accessories



Item No.: 210-196
Aluminum carrier rail; 35 x 8.2 mm; 1.6 mm thick; 2 m long; unslotted; similar to EN 60715; silver-colored



Item No.: 210-198
Copper carrier rail; 35 x 15 mm; 2.3 mm thick; 2 m long; unslotted; according to EN 60715; copper-colored



Item No.: 210-197
Steel carrier rail; 35 x 15 mm; 1.5 mm thick; 2 m long; slotted; similar to EN 60715; silver-colored



Item No.: 210-114
Steel carrier rail; 35 x 15 mm; 1.5 mm thick; 2 m long; unslotted; similar to EN 60715; silver-colored



Item No.: 210-118
Steel carrier rail; 35 x 15 mm; 2.3 mm thick; 2 m long; unslotted; according to EN 60715; silver-colored



Item No.: 210-112
Steel carrier rail; 35 x 7.5 mm; 1 mm thick; 2 m long; slotted; according to EN 60715; "Hole width 25 mm; silver-colored



Item No.: 210-113
Steel carrier rail; 35 x 7.5 mm; 1 mm thick; 2 m long; unslotted; according to EN 60715; silver-colored

1.2.2 Marking

1.2.2.1 Group marker carrier



Item No.: 750-106
Group marker carrier

Continued on next page

1.2.2.2 Marker



Item No.: 750-100
Marker card; as a DIN A4 sheet; plain



Item No.: 2009-145/000-006
Mini-WSB Inline; for Smart Printer; 1700 pieces on roll; stretchable 5 - 5.2 mm; plain; snap-on type; blue



Item No.: 2009-145/000-007
Mini-WSB Inline; for Smart Printer; 1700 pieces on roll; stretchable 5 - 5.2 mm; plain; snap-on type; gray



Item No.: 2009-145/000-023
Mini-WSB Inline; for Smart Printer; 1700 pieces on roll; stretchable 5 - 5.2 mm; plain; snap-on type; green



Item No.: 2009-145/000-012
Mini-WSB Inline; for Smart Printer; 1700 pieces on roll; stretchable 5 - 5.2 mm; plain; snap-on type; orange



Item No.: 2009-145/000-005
Mini-WSB Inline; for Smart Printer; 1700 pieces on roll; stretchable 5 - 5.2 mm; plain; snap-on type; red



Item No.: 2009-145/000-024
Mini-WSB Inline; for Smart Printer; 1700 pieces on roll; stretchable 5 - 5.2 mm; plain; snap-on type; violet



Item No.: 2009-145
Mini-WSB Inline; for Smart Printer; 1700 pieces on roll; stretchable 5 - 5.2 mm; plain; snap-on type; white



Item No.: 2009-145/000-002
Mini-WSB Inline; for Smart Printer; 1700 pieces on roll; stretchable 5 - 5.2 mm; plain; snap-on type; yellow



Item No.: 248-501/000-006
Mini-WSB marking card; as card; not stretchable; plain; snap-on type; blue



Item No.: 248-501/000-007
Mini-WSB marking card; as card; not stretchable; plain; snap-on type; gray



Item No.: 248-501/000-023
Mini-WSB marking card; as card; not stretchable; plain; snap-on type; green



Item No.: 248-501/000-017
Mini-WSB marking card; as card; not stretchable; plain; snap-on type; light green



Item No.: 248-501/000-012
Mini-WSB marking card; as card; not stretchable; plain; snap-on type; orange



Item No.: 248-501/000-005
Mini-WSB marking card; as card; not stretchable; plain; snap-on type; red



Item No.: 248-501/000-024
Mini-WSB marking card; as card; not stretchable; plain; snap-on type; violet



Item No.: 248-501
Mini-WSB marking card; as card; not stretchable; plain; snap-on type; white



Item No.: 248-501/000-002
Mini-WSB marking card; as card; not stretchable; plain; snap-on type; yellow

1.2.2.3 Marker carrier

Item No.: 750-103
Group marker carrier

1.2.3 Pluggable connector

1.2.3.1 Coding



Item No.: 753-150
753 Series coding elements

1.2.4 Shield termination

1.2.4.1 Shield clamping saddles

Item No.: 790-108
Shield clamping saddle; 11 mm wide; diameter of compatible conductor; 3 … 8 mm



Item No.: 790-208
Shield clamping saddle; 12.4 mm wide; 3 … 8 mm



Item No.: 790-116
Shield clamping saddle; 19 mm wide; diameter of compatible conductor; 7 … 16 mm



Item No.: 790-216
Shield clamping saddle; 21.8 mm wide; 6 … 16 mm

Item No.: 790-124
Shield clamping saddle; 27 mm wide; diameter of compatible conductor; 6 … 24 mm



Item No.: 790-220
Shield clamping saddle; 30 mm wide; 6 … 20 mm



Item No.: 790-140
Shield clamping saddle; diameter of compatible conductor

Continued on next page

1.2.5 Supply module

1.2.5.1 Supply module



Item No.: 750-612
Power Supply; 0 ... 230 V AC/DC



Item No.: 753-612
Power Supply; 0 ... 230 V AC/DC

1.2.6 System enclosure

1.2.6.1 System enclosure



Item No.: 850-825
IP65 enclosure; Aluminium (RAL 7032); WxHxD (160x100x160 mm); 9 x M12, 4 x M20



Item No.: 850-826
IP65 enclosure; Aluminium (RAL 7032); WxHxD (240x100x160 mm); 4 x M20, 4 x M16, 14 x M12 cable grip



Item No.: 850-827
IP65 enclosure; Aluminium (RAL 7032); WxHxD (320x100x160 mm); 4 x M20, 8 x M16, 17 x M12 cable grip



Item No.: 850-828
IP65 enclosure; Aluminium (RAL 7032); WxHxD (480x100x160 mm); 4 x M20, 10 x M16, 35 x M12 cable grip



Item No.: 850-826/002-000
IP65 enclosure; Aluminium (RAL 7035); WxHxD (240x100x160 mm); 4 x M20, 4 x M16, 14 x M12 cable grip



Item No.: 850-827/002-000
IP65 enclosure; Aluminium (RAL 7035); WxHxD (320x100x160 mm); 4 x M20, 8 x M16, 17 x M12 cable grip



Item No.: 850-828/002-000
IP65 enclosure; Aluminium (RAL 7035); WxHxD (480x100x160 mm); 4 x M20, 10 x M16, 35 x M12 cable grip



Item No.: 850-834
IP65 enclosure; Polyester (RAL 7032); WxHxD (164x100x164 mm); 9 x M12, 4 x M20



Item No.: 850-835
IP65 enclosure; Polyester (RAL 7032); WxHxD (244x100x164 mm); 4 x M20, 4 x M16, 14 x M12 cable grip



Item No.: 850-836
IP65 enclosure; Polyester (RAL 7032); WxHxD (324x100x164 mm); 4 x M20, 8 x M16, 17 x M12 cable grip



Item No.: 850-814/002-000
IP65 enclosure; Sheet steel (RAL 7035); WxHxD (200x120x200 mm); without flange plate



Item No.: 850-815/002-000
IP65 enclosure; Sheet steel (RAL 7035); WxHxD (300x120x200 mm); without flange plate



Item No.: 850-816/002-000
IP65 enclosure; Sheet steel (RAL 7035); WxHxD (400x120x200 mm); without flange plate



Item No.: 850-817/002-000
IP65 enclosure; Sheet steel (RAL 7035); WxHxD (600x120x200 mm); without flange plate