# Data Sheet | Item Number: 753-476

2-channel analog input; ±10 VDC; Single-ended; 16 bits

https://www.wago.com/753-476

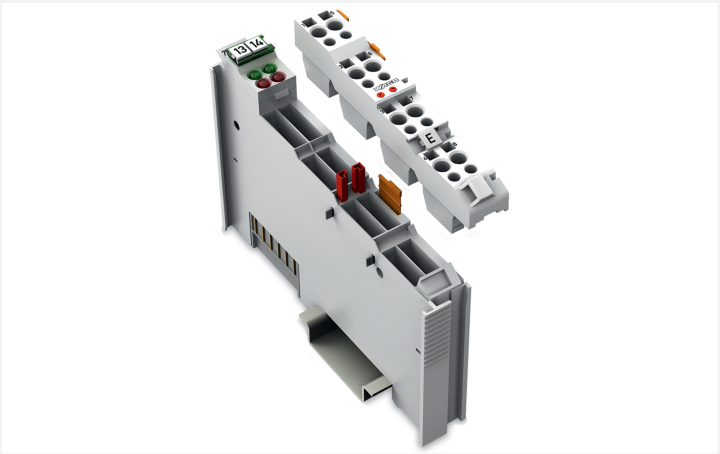

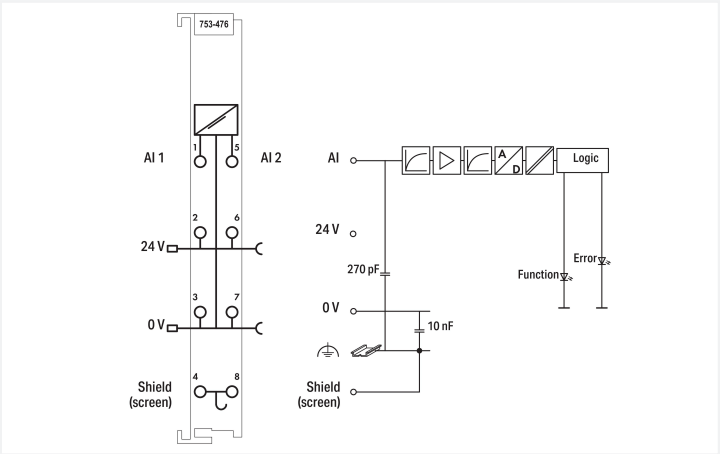


Color: light gray

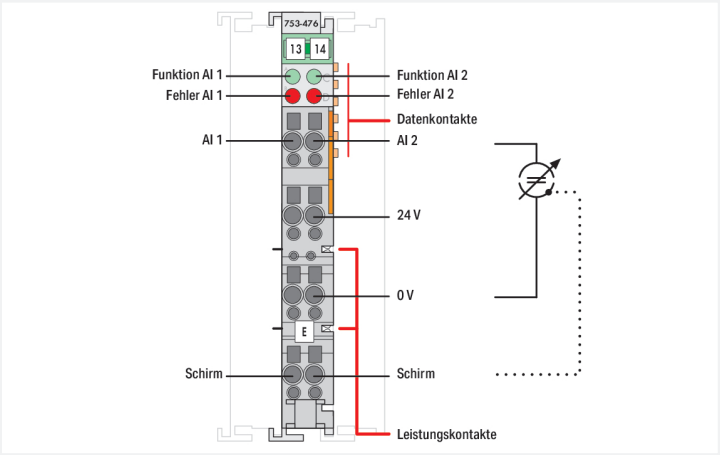


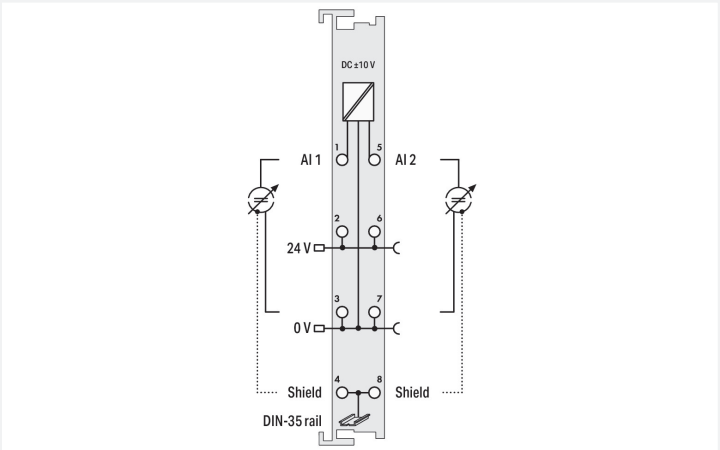


This analog input module processes standard ±10 V signals.
The input signal is electrically isolated and is transmitted with a resolution of 16 bits.
The internal system supply powers the module.
The input channels of the module have a common ground potential.
The 24 V supply is derived from the power jumper contacts.
The shield directly connects to the DIN-rail.

## Notes

| | |
|---|---|
| Note | Pluggable connectors and coding fingers (753 Series) are not included. |

## Technical data

| | |
|---|---|
| Number of analog inputs | 2 |
| Total number of channels (module) | 2 |
| Signal type | Voltage |
| Signal type (voltage) | -10 … +10 VDC |
| Sensor connection | 2 x (2-wire) |
| Input filter frequency (analog) | 50 Hz |
| Input voltage (max.) | 24 V |
| Signal characteristics | Single-ended |
| Resolution [bit] | 16 bits |
| Data width | 2 x 16-bit data; 2 x 8-bit control/status (optional) |
| Noise rejection at sampling frequency | -100 dB |
| Noise rejection above sampling frequency | -40 dB |
| Internal resistance | 130 kΩ |
| Conversion time (typ.) | 80 ms |
| Measurement error (reference temperature) | 25 °C |
| Measurement error, deviation (max.) from the upper-range value | 0.1 % |
| Temperature error (max.) of the upper-range value | 0.01 %/K |
| Supply voltage (system) | 5 VDC; via data contacts |
| Current consumption (system supply) | 75 mA |
| Supply voltage (field) | 24 VDC (-25 … +30 %); via power jumper contacts (power supply via blade contact; transmission (field side supply voltage only) via spring contact) |
| Isolation | 500 V system/field |
| Indicators | LED (A, C) green: Function AI 1, AI 2; LED (B, D) red: Error AI 1, AI 2 |
| Number of incoming power jumper contacts | 2 |
| Number of outgoing power jumper contacts | 2 |

## Connection Data

| | |
|---|---|
| Connection technology: I/O | 8 x CAGE CLAMP® |
| Connectable conductor materials | Copper |
| Connection type | Inputs/outputs |
| Solid conductor | 0.08 … 2.5 mm² / 28 … 14 AWG |
| Fine-stranded conductor | 0.08 … 2.5 mm² / 28 … 14 AWG |
| Strip length | 9 … 10 mm / 0.35 … 0.39 inches |

## Physical data

| | |
|---|---|
| Width | 12 mm / 0.472 inches |
| Height | 100 mm / 3.937 inches |
| Depth | 69.8 mm / 2.748 inches |
| Depth from upper-edge of DIN-rail | 62.6 mm / 2.465 inches |

## Mechanical data

| | |
|---|---|
| Mounting type | DIN-35 rail |
| Pluggable connector | pluggable |


Continued on next page

## Material data

| | |
|---|---|
| Color | light gray |
| Housing material | Polycarbonate; polyamide 6.6 |
| Fire load | 0.77 MJ |
| Weight | 46 g |
| Conformity marking | CE |

## Environmental requirements

| | |
|---|---|
| Ambient temperature (operation) | 0 … +55 °C |
| Ambient temperature (storage) | -40 … +85 °C |
| Protection type | IP20 |
| Pollution degree | 2 per IEC 61131-2 |
| Operating altitude | 0 … 2000 m / 0 … 6562 ft |
| Mounting position | Horizontal left, horizontal right, horizontal top, horizontal bottom, vertical top and vertical bottom |
| Relative humidity (without condensation) | 95 % |
| Vibration resistance | 4g per IEC 60068-2-6 |
| Shock resistance | 15g per IEC 60068-2-27 |
| EMC immunity to interference | per EN 61000-6-2, marine applications |
| EMC emission of interference | per EN 61000-6-4, marine applications |
| Exposure to pollutants | per IEC 60068-2-42 and IEC 60068-2-43 |
| Permissible $H_2S$ contaminant concentration at a relative humidity 75 % | 10 ppm |
| Permissible $SO_2$ contaminant concentration at a relative humidity 75 % | 25 ppm |

## Commercial data

| | |
|---|---|
| Product Group | 15 (I/O System) |
| PU (SPU) | 1 pcs |
| Packaging type | Box |
| Country of origin | DE |
| GTIN | 4045454394530 |
| Customs tariff number | 85437090990 |

## Product Classification

| | |
|---|---|
| UNSPSC | 32101602 |
| eCl@ss 10.0 | 27-24-26-01 |
| eCl@ss 9.0 | 27-24-26-01 |
| ETIM 9.0 | EC001596 |
| ETIM 10.0 | EC001596 |
| ECCN | NO US CLASSIFICATION |

## Environmental Product Compliance

| | |
|---|---|
| CAS-No. | 1303-86-2<br>1317-36-8<br>25550-51-0<br>7439-92-1<br>80-43-3 |
| REACH Candidate List Substance | 4-Methyl-1,2-cyclohexanedicarboxylic anhydride<br>Diboron trioxide<br>Lead<br>Lead monoxide<br>Peroxide, bis(1-methyl-1-phenylethyl) |
| RoHS Compliance Status | Compliant,With Exemption |
| RoHS Exemption | 6(c)<br>7(a)<br>7(c)-I<br>7(c)-II |
| SCIP notification number (Austria) | 811c65a2-4d74-4580-95b8-e674c8d91458 |


Continued on next page

## Environmental Product Compliance

| | |
|---|---|
| SCIP notification number (Belgium) | 7f3c25d9-7dea-4b59-8638-67cf80eae5a5 |
| SCIP notification number (Bulgaria) | f8e4b7df-ec86-4388-b883-fb0b5c1dfb20 |
| SCIP notification number (Czech Republic) | d96eba4e-ba50-4e95-8614-329cd09c8153 |
| SCIP notification number (Denmark) | 8d876542-e570-4f22-9698-cf1fd4555a2e |
| SCIP notification number (Finland) | 6800c0e0-beec-4523-9e20-0eb65b2b5702 |
| SCIP notification number (France) | a240884d-baa9-4c7b-b827-2eae641e74ca |
| SCIP notification number (Germany) | 146b1e61-ba93-4aa8-a1b9-9f58d89fc93b |
| SCIP notification number (Hungary) | 8c8c03d4-17b7-4089-b432-9cc78118cc92 |
| SCIP notification number (Italy) | affba110-c908-46d6-a243-e28d5bc5e43d |
| SCIP notification number (Netherlands) | 4b7c0291-74a4-4282-bac2-14f713909c02 |
| SCIP notification number (Poland) | 7a29e124-28c3-4dd2-b415-6ec331411502 |
| SCIP notification number (Romania) | 2ccea641-1761-4ccc-933d-bff5cbbb1e05 |
| SCIP notification number (Sweden) | 65cf34d7-3e12-4f34-9247-e2347bb34ffa |

## Approvals / Certificates

### General approvals

| Approval | Standard | Certificate Name |
|---|---|---|
| EAC<br>GZO Almaty Standart | TP TC 020/2011 | EAC CoC 03083 |
| KC<br>National Radio Research Agency | Article 58-2, Clause 3 | MSIP-REM-W43-AIM750 |
| UL<br>Underwriters Laboratories Inc. (ORDINARY LOCATIONS) | UL 508 | E175199 |

### Declarations of conformity and manufacturer's declarations

| Approval | Standard | Certificate Name |
|---|---|---|
| EU-Declaration of Conformity<br>WAGO GmbH & Co. KG | - | - |
| UK-Declaration of Conformity<br>WAGO GmbH & Co. KG | - | - |

### Approvals for marine applications

| Approval | Standard | Certificate Name |
|---|---|---|
| ABS<br>American Bureau of Shipping | - | 25-0415412 |
| BSH<br>Bundesamt fuer Seeschiffahrt und Hydrographie | - | 1104 |
| BV<br>Bureau Veritas S.A. | - | 13453/E0 BV |
| DNV<br>DNV GL SE | DNV-CG-0339,Aug.2021 | TAA0000194 |
| KR<br>Korean Register of Shipping | - | KR HMB05880-AC001 |
| LR<br>Lloyds Register EMEA | - | LR22180952TA |
| PRS<br>Polski Rejestr Statków | - | TE/1101/880590/23 |
| RINA<br>RINA Germany GmbH | - | ELE343521XG001 |

### Approvals for hazardous areas

| Approval | Standard | Certificate Name |
|---|---|---|
| ATEX<br>TUEV Nord Cert GmbH | EN 60079-0 | TUEV14ATEX148929X (II 3 G Ex ec IIC T4 Gc) |
| CCCEx<br>CQST/CNEx | CNCA-C23-01 | 2020312310000213 (Ex ec IIC T4 Gc) |
| IECEx<br>TUEV Nord Cert GmbH | IEC 60079-0 | IECEx TUN 14.0035 X (Ex ec IIC T4 Gc) |
| INMETRO<br>TÜV Rheinland do Brasil Ltda. | IEC 60079-0 | TÜV 12.1297 X |
| UKEx<br>WAGO GmbH & Co. KG | EN 60079-0 | UKCA_WA GO22UKEX003X_ec |
| UL<br>Underwriters Laboratories Inc. (HAZARDOUS LOCATIONS) | UL 121201 | E198726 |


Continued on next page

## Downloads

### Environmental Product Compliance

**Compliance Search**

Environmental Product Compliance 753-476

### Documentation

**Manual**

| | | |
|---|---|---|
| Product Manual 2-channel, ± 10VDC, single ended | V 1.0.2 | pdf 281.45 KB |
| System Manual Series 750/753 | | |

**System Description**

| | |
|---|---|
| 750/753 Series I/O-System – General Product Information | pdf 953.35 KB |
| Overview on WAGO-I/O-SYSTEM 750 approvals | pdf 770.48 KB |

**Bid Text**

| | | |
|---|---|---|
| 753-476 | 19.02.2019 | xml 4.79 KB |
| 753-476 | 17.10.2017 | doc 28.50 KB |

**Instruction Leaflet**

| | | |
|---|---|---|
| CCC Ex (Additional information) | 26.04.2023 | pdf 159.76 KB |

### CAD/CAE-Data

**CAD data**

2D/3D Models 753-476

**CAE data**

EPLAN Data Portal 753-476

WSCAD Universe 753-476

ZUKEN Portal 753-476

## 1 Compatible Products

### 1.1 Required Accessories

#### 1.1.1 Pluggable connector

##### 1.1.1.1 Male connector/plug



Item No.: 753-110
Plug

## 1.2 Optional Accessories

### 1.2.1 DIN-rail

#### 1.2.1.1 Mounting accessories



Item No.: 210-196
Aluminum carrier rail; 35 x 8.2 mm; 1.6 mm thick; 2 m long; unslotted; similar to EN 60715; silver-colored



Item No.: 210-198
Copper carrier rail; 35 x 15 mm; 2.3 mm thick; 2 m long; unslotted; according to EN 60715; copper-colored



Item No.: 210-197
Steel carrier rail; 35 x 15 mm; 1.5 mm thick; 2 m long; slotted; similar to EN 60715; silver-colored



Item No.: 210-114
Steel carrier rail; 35 x 15 mm; 1.5 mm thick; 2 m long; unslotted; similar to EN 60715; silver-colored



Item No.: 210-118
Steel carrier rail; 35 x 15 mm; 2.3 mm thick; 2 m long; unslotted; according to EN 60715; silver-colored



Item No.: 210-112
Steel carrier rail; 35 x 7.5 mm; 1 mm thick; 2 m long; slotted; according to EN 60715; "Hole width 25 mm; silver-colored



Item No.: 210-113
Steel carrier rail; 35 x 7.5 mm; 1 mm thick; 2 m long; unslotted; according to EN 60715; silver-colored

### 1.2.2 Marking

#### 1.2.2.1 Group marker carrier



Item No.: 750-106
Group marker carrier

#### 1.2.2.2 Marker



Item No.: 750-100
Marker card; as a DIN A4 sheet; plain



Item No.: 2009-145/000-006
Mini-WSB Inline; for Smart Printer; 1700 pieces on roll; stretchable 5 - 5.2 mm; plain; snap-on type; blue



Item No.: 2009-145/000-007
Mini-WSB Inline; for Smart Printer; 1700 pieces on roll; stretchable 5 - 5.2 mm; plain; snap-on type; gray



Item No.: 2009-145/000-023
Mini-WSB Inline; for Smart Printer; 1700 pieces on roll; stretchable 5 - 5.2 mm; plain; snap-on type; green



Item No.: 2009-145/000-012
Mini-WSB Inline; for Smart Printer; 1700 pieces on roll; stretchable 5 - 5.2 mm; plain; snap-on type; orange



Item No.: 2009-145/000-005
Mini-WSB Inline; for Smart Printer; 1700 pieces on roll; stretchable 5 - 5.2 mm; plain; snap-on type; red



Item No.: 2009-145/000-024
Mini-WSB Inline; for Smart Printer; 1700 pieces on roll; stretchable 5 - 5.2 mm; plain; snap-on type; violet



Item No.: 2009-145
Mini-WSB Inline; for Smart Printer; 1700 pieces on roll; stretchable 5 - 5.2 mm; plain; snap-on type; white



Item No.: 2009-145/000-002
Mini-WSB Inline; for Smart Printer; 1700 pieces on roll; stretchable 5 - 5.2 mm; plain; snap-on type; yellow



Item No.: 248-501/000-006
Mini-WSB marking card; as card; not stretchable; plain; snap-on type; blue



Item No.: 248-501/000-007
Mini-WSB marking card; as card; not stretchable; plain; snap-on type; gray



Item No.: 248-501/000-023
Mini-WSB marking card; as card; not stretchable; plain; snap-on type; green



Item No.: 248-501/000-017
Mini-WSB marking card; as card; not stretchable; plain; snap-on type; light green



Item No.: 248-501/000-012
Mini-WSB marking card; as card; not stretchable; plain; snap-on type; orange



Item No.: 248-501/000-005
Mini-WSB marking card; as card; not stretchable; plain; snap-on type; red



Item No.: 248-501/000-024
Mini-WSB marking card; as card; not stretchable; plain; snap-on type; violet



Item No.: 248-501
Mini-WSB marking card; as card; not stretchable; plain; snap-on type; white



Item No.: 248-501/000-002
Mini-WSB marking card; as card; not stretchable; plain; snap-on type; yellow


Continued on next page

### 1.2.2.3 Marker carrier



Item No.: 750-103
Group marker carrier

### 1.2.3 Pluggable connector

### 1.2.3.1 Coding



Item No.: 753-150
753 Series coding elements

### 1.2.4 Shield termination

### 1.2.4.1 Shield clamping saddles



Item No.: 790-108
Shield clamping saddle; 11 mm wide; diameter of compatible conductor; 3 … 8 mm



Item No.: 790-208
Shield clamping saddle; 12.4 mm wide; 3 … 8 mm



Item No.: 790-116
Shield clamping saddle; 19 mm wide; diameter of compatible conductor; 7 … 16 mm



Item No.: 790-216
Shield clamping saddle; 21.8 mm wide; 6 … 16 mm



Item No.: 790-124
Shield clamping saddle; 27 mm wide; diameter of compatible conductor; 6 … 24 mm



Item No.: 790-220
Shield clamping saddle; 30 mm wide; 6 … 20 mm



Item No.: 790-140
Shield clamping saddle; diameter of compatible conductor

### 1.2.5 Supply module

### 1.2.5.1 Supply module



Item No.: 750-612
Power Supply; 0 … 230 V AC/DC



Item No.: 753-612
Power Supply; 0 … 230 V AC/DC



Item No.: 750-602
Power Supply; 24 VDC



Item No.: 753-602
Power Supply; 24 VDC



Item No.: 750-601
Power Supply; 24 VDC; fuse holder



Item No.: 750-610
Power Supply; 24 VDC; fuse holder; Diagnostics

### 1.2.6 System enclosure

### 1.2.6.1 System enclosure



Item No.: 850-825
IP65 enclosure; Aluminium (RAL 7032); WxHxD (160x100x160 mm); 9 x M12, 4 x M20



Item No.: 850-826
IP65 enclosure; Aluminium (RAL 7032); WxHxD (240x100x160 mm); 4 x M20, 4 x M16, 14 x M12 cable grip



Item No.: 850-827
IP65 enclosure; Aluminium (RAL 7032); WxHxD (320x100x160 mm); 4 x M20, 8 x M16, 17 x M12 cable grip



Item No.: 850-828
IP65 enclosure; Aluminium (RAL 7032); WxHxD (480x100x160 mm); 4 x M20, 10 x M16, 35 x M12 cable grip



Item No.: 850-826/002-000
IP65 enclosure; Aluminium (RAL 7035); WxHxD (240x100x160 mm); 4 x M20, 4 x M16, 14 x M12 cable grip



Item No.: 850-827/002-000
IP65 enclosure; Aluminium (RAL 7035); WxHxD (320x100x160 mm); 4 x M20, 8 x M16, 17 x M12 cable grip



Item No.: 850-828/002-000
IP65 enclosure; Aluminium (RAL 7035); WxHxD (480x100x160 mm); 4 x M20, 10 x M16, 35 x M12 cable grip



Item No.: 850-834
IP65 enclosure; Polyester (RAL 7032); WxHxD (164x100x164 mm); 9 x M12, 4 x M20


Continued on next page

### 1.2.6.1 System enclosure



Item No.: 850-835
IP65 enclosure; Polyester (RAL 7032); WxHxD (244x100x164 mm); 4 x M20, 4 x M16, 14 x M12 cable grip



Item No.: 850-836
IP65 enclosure; Polyester (RAL 7032); WxHxD (324x100x164 mm); 4 x M20, 8 x M16, 17 x M12 cable grip



Item No.: 850-814/002-000
IP65 enclosure; Sheet steel (RAL 7035); WxHxD (200x120x200 mm); without flange plate



Item No.: 850-815/002-000
IP65 enclosure; Sheet steel (RAL 7035); WxHxD (300x120x200 mm); without flange plate



Item No.: 850-816/002-000
IP65 enclosure; Sheet steel (RAL 7035); WxHxD (400x120x200 mm); without flange plate



Item No.: 850-817/002-000
IP65 enclosure; Sheet steel (RAL 7035); WxHxD (600x120x200 mm); without flange plate