Data Sheet | Item Number: 753-550

2-channel analog output; 0 … 10 VDC

https://www.wago.com/753-550

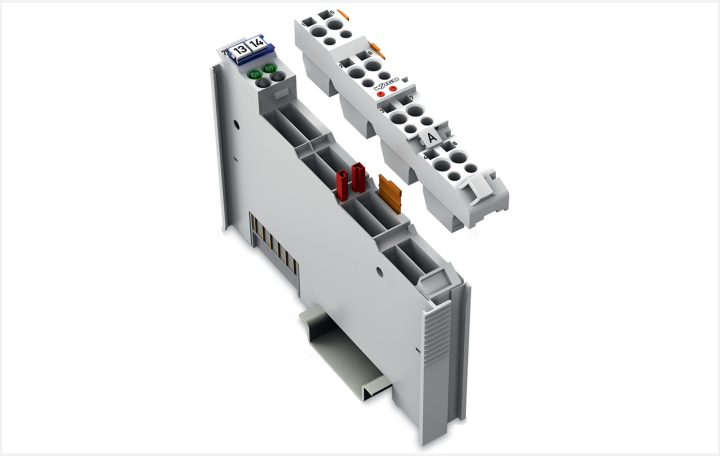

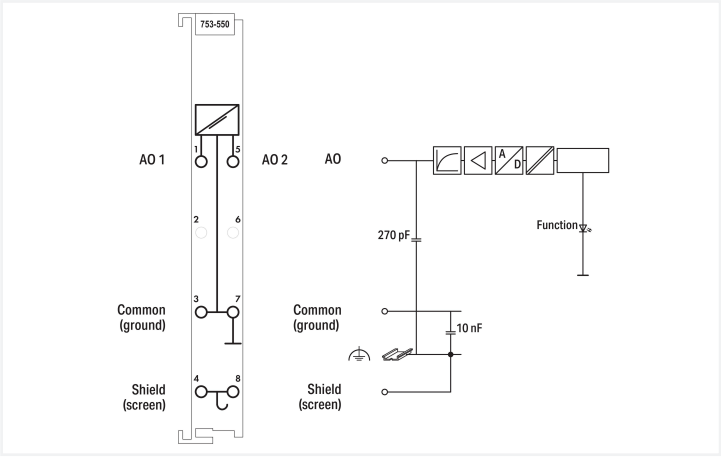

Color: light gray

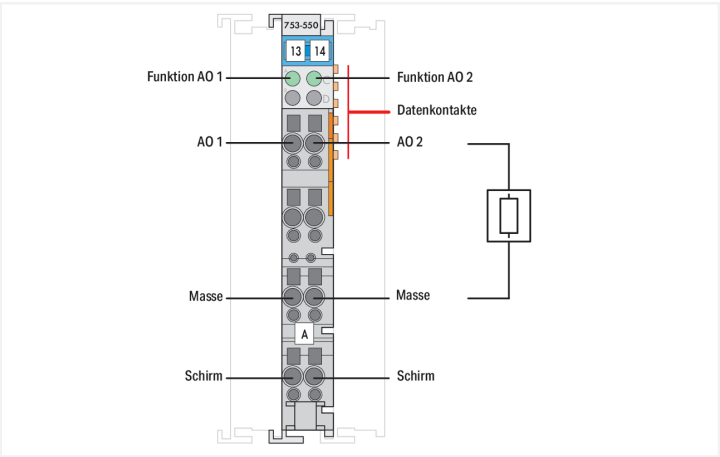

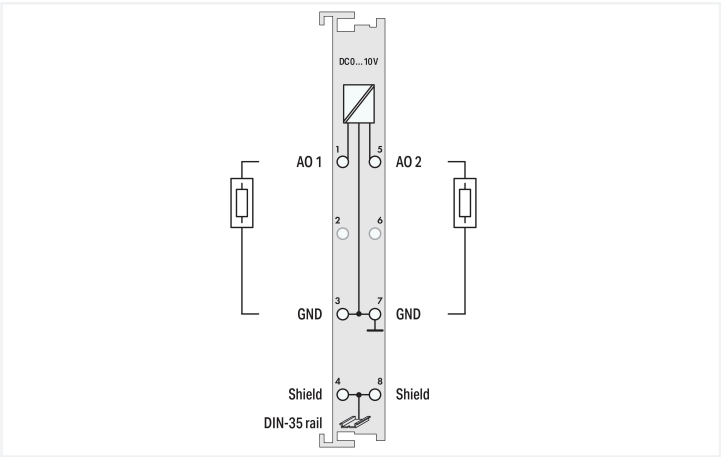

This analog output module generates standard 0–10 V signals.
The output signal is electrically isolated and transmitted with a resolution of 12 bits.
The outputs are short-circuit-protected.
The internal system supply powers the module.
The output channels have one common ground potential.

Notes

Note	Pluggable connectors and coding fingers (753 Series) are not included.

Technical data

Number of analog outputs	2
Total number of channels (module)	2
Signal type	Voltage
Signal type (voltage)	0 … 10 VDC
Actuator connection	2 x (2-wire)
Resolution [bit]	12 bits
Data width	2 x 16-bit data; 2 x 8-bit control/status (optional)
Load impedance (voltage output)	≥ 5 kΩ
Conversion time (typ.)	2 ms
Output error, reference temperature	25 °C
Output error, deviation (max.) of the upper-range value	0.1 %
Temperature error (max.) of the output range value	0.01 %/K
Recovery time (typ.)	0.3 ms
Linearity	±10 mV
Supply voltage (system)	5 VDC; via data contacts
Current consumption (system supply)	65 mA
Isolation	500 V system/field
Indicators	LED (A, C) green: Function AO 1, AO 2

Connection Data

Connection technology: I/O	6 x CAGE CLAMP®
Connectable conductor materials	Copper
Connection type	Inputs/outputs
Solid conductor	0.08 … 2.5 mm² / 28 … 14 AWG
Fine-stranded conductor	0.08 … 2.5 mm² / 28 … 14 AWG
Strip length	9 … 10 mm / 0.35 … 0.39 inches

Physical data

Width	12 mm / 0.472 inches
Height	100 mm / 3.937 inches
Depth	69.8 mm / 2.748 inches
Depth from upper-edge of DIN-rail	62.6 mm / 2.465 inches

Mechanical data

Mounting type	DIN-35 rail
Pluggable connector	pluggable

Material data

Color	light gray
Housing material	Polycarbonate; polyamide 6.6
Fire load	0.774 MJ
Weight	41 g
Conformity marking	CE

Continued on next page

Environmental requirements

Ambient temperature (operation)	0 … +55 °C
Ambient temperature (storage)	-40 … +85 °C
Protection type	IP20
Pollution degree	2 per IEC 61131-2
Operating altitude	0 … 2000 m / 0 … 6562 ft
Mounting position	Horizontal left, horizontal right, horizontal top, horizontal bottom, vertical top and vertical bottom
Relative humidity (without condensation)	95 %
Vibration resistance	4g per IEC 60068-2-6
Shock resistance	15g per IEC 60068-2-27
EMC immunity to interference	per EN 61000-6-2, marine applications
EMC emission of interference	per EN 61000-6-4, marine applications
Exposure to pollutants	per IEC 60068-2-42 and IEC 60068-2-43
Permissible H_2S contaminant concentration at a relative humidity 75 %	10 ppm
Permissible SO_2 contaminant concentration at a relative humidity 75 %	25 ppm

Commercial data

Product Group	15 (I/O System)
PU (SPU)	1 pcs
Packaging type	Box
Country of origin	DE
GTIN	4045454394578
Customs tariff number	85389099990

Product Classification

UNSPSC	32101505
eCl@ss 10.0	27-24-26-01
eCl@ss 9.0	27-24-26-01
ETIM 9.0	EC001596
ETIM 10.0	EC001596
ECCN	NO US CLASSIFICATION

Environmental Product Compliance

CAS-No.	1303-86-2 1317-36-8 25550-51-0 7439-92-1
REACH Candidate List Substance	4-Methyl-1,2-cyclohexanedicarboxylic anhydride Diboron trioxide Lead Lead monoxide
RoHS Compliance Status	Compliant,With Exemption
RoHS Exemption	6(c) 7(a) 7(c)-I 7(c)-II
SCIP notification number (Austria)	3d216412-ec3b-40a7-9c38-175244ad39b3
SCIP notification number (Belgium)	a043ea83-e345-46a5-a789-7c2b7e3d7936
SCIP notification number (Bulgaria)	f25f050e-0199-41c8-b1e9-dde8052997ba
SCIP notification number (Czech Republic)	e30e94e7-37af-4bc5-b900-35bc0cf2c209
SCIP notification number (Denmark)	a4522421-0cda-44f7-b4ac-6c1ec2b2af14
SCIP notification number (Finland)	8acf8dec-23ec-414b-aa75-b6f9b8d03ca9
SCIP notification number (France)	d4502d26-b8a2-410c-8284-f58b6135daee
SCIP notification number (Germany)	a6f4bad6-fd00-4edc-bd91-81b9dbbd1bd1
SCIP notification number (Hungary)	cf685030-900c-45ab-ae86-8ba83afe8a6d
SCIP notification number (Italy)	ce0ce3d9-79c5-4c23-8732-5c147a209674

Continued on next page

Environmental Product Compliance

SCIP notification number (Netherlands)	6bdcaf3f-3d5a-4984-b373-dc48da7f7fdb
SCIP notification number (Poland)	8791bbc5-3584-48d2-ab0a-5c631ff94614
SCIP notification number (Romania)	ff160216-1152-4016-9762-46a98719cab3
SCIP notification number (Sweden)	6c8c419d-2f3e-4833-93dd-1cc5c23e4b66

Approvals / Certificates

General approvals

Approval	Standard	Certificate Name
EAC GZO Almaty Standart	TP TC 020/2011	EAC CoC 03083
KC National Radio Research Agency	Article 58-2, Clause 3	MSIP-REM-W43-AOM750
UL Underwriters Laboratories Inc. (ORDINARY LOCATIONS)	UL 508	E175199

Declarations of conformity and manufacturer's declarations

Approval	Standard	Certificate Name
EU-Declaration of Conformity WAGO GmbH & Co. KG	-	-
UK-Declaration of Conformity WAGO GmbH & Co. KG	-	-

Approvals for marine applications

Approval	Standard	Certificate Name
ABS American Bureau of Shipping	-	25-0415412
BSH Bundesamt fuer Seeschiffahrt und Hydrographie	-	1104
BV Bureau Veritas S.A.	-	13453/E0 BV
DNV DNV GL SE	DNV-CG-0339,Aug.2021	TAA0000194
KR Korean Register of Shipping	-	KR HMB05880-AC001
LR Lloyds Register EMEA	-	LR22180952TA
PRS Polski Rejestr Statków	-	TE/1101/880590/23
RINA RINA Germany GmbH	-	ELE343521XG001

Approvals for hazardous areas

Approval	Standard	Certificate Name
ATEX TUEV Nord Cert GmbH	EN 60079-0	TUEV14ATEX148929X (II 3 G Ex ec IIC T4 Gc)
CCCEx CQST/CNEx	CNCA-C23-01	2020312310000213 (Ex ec IIC T4 Gc)
INMETRO TÜV Rheinland do Brasil Ltda.	IEC 60079-0	TÜV 12.1297 X
UKEx WAGO GmbH & Co. KG	EN 60079-0	UKCA_WA GO22UKEX003X_ec
UL Underwriters Laboratories Inc. (HAZARDOUS LOCATIONS)	UL 121201	E198726

Continued on next page

Downloads

Environmental Product Compliance

Compliance Search

Environmental Product Compliance 753-550

Documentation

Manual

Product Manual 2-channel, 0-10VDC	V 1.0.2	pdf 279.06 KB
System Manual Series 750/753		

System Description

750/753 Series I/O-System – General Product Information	pdf 953.35 KB
Overview on WAGO-I/O-SYSTEM 750 approvals	pdf 770.48 KB

Bid Text

753-550	19.02.2019	xml 4.54 KB
753-550	05.03.2019	docx 17.33 KB

Instruction Leaflet

CCC Ex (Additional information)	26.04.2023	pdf 159.76 KB

CAD/CAE-Data

CAD data

2D/3D Models 753-550

CAE data

EPLAN Data Portal 753-550

WSCAD Universe 753-550

ZUKEN Portal 753-550

1 Compatible Products

1.1 Required Accessories

1.1.1 Pluggable connector

1.1.1.1 Male connector/plug



Item No.: 753-110
Plug

 Continued on next page

1.2 Optional Accessories

1.2.1 DIN-rail

1.2.1.1 Mounting accessories



Item No.: 210-196
Aluminum carrier rail; 35 x 8.2 mm; 1.6 mm thick; 2 m long; unslotted; similar to EN 60715; silver-colored



Item No.: 210-198
Copper carrier rail; 35 x 15 mm; 2.3 mm thick; 2 m long; unslotted; according to EN 60715; copper-colored



Item No.: 210-197
Steel carrier rail; 35 x 15 mm; 1.5 mm thick; 2 m long; slotted; similar to EN 60715; silver-colored



Item No.: 210-114
Steel carrier rail; 35 x 15 mm; 1.5 mm thick; 2 m long; unslotted; similar to EN 60715; silver-colored



Item No.: 210-118
Steel carrier rail; 35 x 15 mm; 2.3 mm thick; 2 m long; unslotted; according to EN 60715; silver-colored



Item No.: 210-112
Steel carrier rail; 35 x 7.5 mm; 1 mm thick; 2 m long; slotted; according to EN 60715; "Hole width 25 mm; silver-colored



Item No.: 210-113
Steel carrier rail; 35 x 7.5 mm; 1 mm thick; 2 m long; unslotted; according to EN 60715; silver-colored

1.2.2 Marking

1.2.2.1 Group marker carrier



Item No.: 750-106
Group marker carrier

1.2.2.2 Marker



Item No.: 750-100
Marker card; as a DIN A4 sheet; plain



Item No.: 2009-145/000-006
Mini-WSB Inline; for Smart Printer; 1700 pieces on roll; stretchable 5 - 5.2 mm; plain; snap-on type; blue



Item No.: 2009-145/000-007
Mini-WSB Inline; for Smart Printer; 1700 pieces on roll; stretchable 5 - 5.2 mm; plain; snap-on type; gray



Item No.: 2009-145/000-023
Mini-WSB Inline; for Smart Printer; 1700 pieces on roll; stretchable 5 - 5.2 mm; plain; snap-on type; green



Item No.: 2009-145/000-012
Mini-WSB Inline; for Smart Printer; 1700 pieces on roll; stretchable 5 - 5.2 mm; plain; snap-on type; orange



Item No.: 2009-145/000-005
Mini-WSB Inline; for Smart Printer; 1700 pieces on roll; stretchable 5 - 5.2 mm; plain; snap-on type; red



Item No.: 2009-145/000-024
Mini-WSB Inline; for Smart Printer; 1700 pieces on roll; stretchable 5 - 5.2 mm; plain; snap-on type; violet



Item No.: 2009-145
Mini-WSB Inline; for Smart Printer; 1700 pieces on roll; stretchable 5 - 5.2 mm; plain; snap-on type; white



Item No.: 2009-145/000-002
Mini-WSB Inline; for Smart Printer; 1700 pieces on roll; stretchable 5 - 5.2 mm; plain; snap-on type; yellow



Item No.: 248-501/000-006
Mini-WSB marking card; as card; not stretchable; plain; snap-on type; blue



Item No.: 248-501/000-007
Mini-WSB marking card; as card; not stretchable; plain; snap-on type; gray



Item No.: 248-501/000-023
Mini-WSB marking card; as card; not stretchable; plain; snap-on type; green



Item No.: 248-501/000-017
Mini-WSB marking card; as card; not stretchable; plain; snap-on type; light green



Item No.: 248-501/000-012
Mini-WSB marking card; as card; not stretchable; plain; snap-on type; orange



Item No.: 248-501/000-005
Mini-WSB marking card; as card; not stretchable; plain; snap-on type; red



Item No.: 248-501/000-024
Mini-WSB marking card; as card; not stretchable; plain; snap-on type; violet



Item No.: 248-501
Mini-WSB marking card; as card; not stretchable; plain; snap-on type; white



Item No.: 248-501/000-002
Mini-WSB marking card; as card; not stretchable; plain; snap-on type; yellow

Continued on next page

1.2.2.3 Marker carrier



Item No.: 750-103
Group marker carrier

1.2.3 Pluggable connector

1.2.3.1 Coding



Item No.: 753-150
753 Series coding elements

1.2.4 Shield termination

1.2.4.1 Shield clamping saddles



Item No.: 790-108
Shield clamping saddle; 11 mm wide; diameter of compatible conductor; 3 … 8 mm



Item No.: 790-208
Shield clamping saddle; 12.4 mm wide; 3 … 8 mm



Item No.: 790-116
Shield clamping saddle; 19 mm wide; diameter of compatible conductor; 7 … 16 mm



Item No.: 790-216
Shield clamping saddle; 21.8 mm wide; 6 … 16 mm



Item No.: 790-124
Shield clamping saddle; 27 mm wide; diameter of compatible conductor; 6 … 24 mm



Item No.: 790-220
Shield clamping saddle; 30 mm wide; 6 … 20 mm



Item No.: 790-140
Shield clamping saddle; diameter of compatible conductor

1.2.5 System enclosure

1.2.5.1 System enclosure



Item No.: 850-825
IP65 enclosure; Aluminium (RAL 7032); WxHxD (160x100x160 mm); 9 x M12, 4 x M20



Item No.: 850-826
IP65 enclosure; Aluminium (RAL 7032); WxHxD (240x100x160 mm); 4 x M20, 4 x M16, 14 x M12 cable grip



Item No.: 850-827
IP65 enclosure; Aluminium (RAL 7032); WxHxD (320x100x160 mm); 4 x M20, 8 x M16, 17 x M12 cable grip



Item No.: 850-828
IP65 enclosure; Aluminium (RAL 7032); WxHxD (480x100x160 mm); 4 x M20, 10 x M16, 35 x M12 cable grip



Item No.: 850-826/002-000
IP65 enclosure; Aluminium (RAL 7035); WxHxD (240x100x160 mm); 4 x M20, 4 x M16, 14 x M12 cable grip



Item No.: 850-827/002-000
IP65 enclosure; Aluminium (RAL 7035); WxHxD (320x100x160 mm); 4 x M20, 8 x M16, 17 x M12 cable grip



Item No.: 850-828/002-000
IP65 enclosure; Aluminium (RAL 7035); WxHxD (480x100x160 mm); 4 x M20, 10 x M16, 35 x M12 cable grip



Item No.: 850-834
IP65 enclosure; Polyester (RAL 7032); WxHxD (164x100x164 mm); 9 x M12, 4 x M20



Item No.: 850-835
IP65 enclosure; Polyester (RAL 7032); WxHxD (244x100x164 mm); 4 x M20, 4 x M16, 14 x M12 cable grip



Item No.: 850-836
IP65 enclosure; Polyester (RAL 7032); WxHxD (324x100x164 mm); 4 x M20, 8 x M16, 17 x M12 cable grip



Item No.: 850-814/002-000
IP65 enclosure; Sheet steel (RAL 7035); WxHxD (200x120x200 mm); without flange plate



Item No.: 850-815/002-000
IP65 enclosure; Sheet steel (RAL 7035); WxHxD (300x120x200 mm); without flange plate



Item No.: 850-816/002-000
IP65 enclosure; Sheet steel (RAL 7035); WxHxD (400x120x200 mm); without flange plate



Item No.: 850-817/002-000
IP65 enclosure; Sheet steel (RAL 7035); WxHxD (600x120x200 mm); without flange plate