Data Sheet | Item Number: 753-648

LON®-FTT Interface

https://www.wago.com/753-648

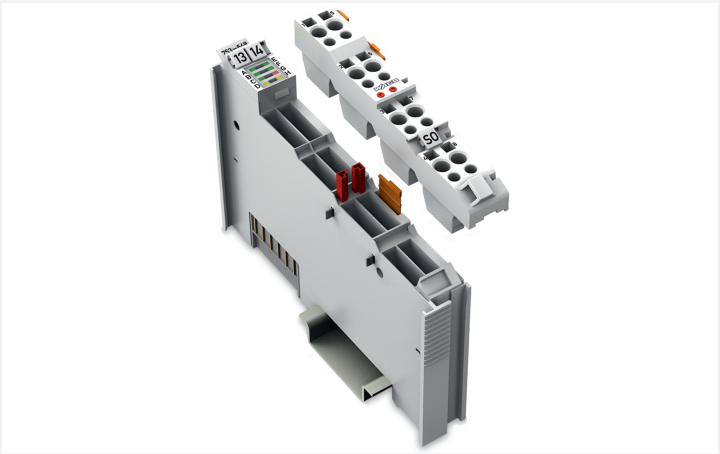



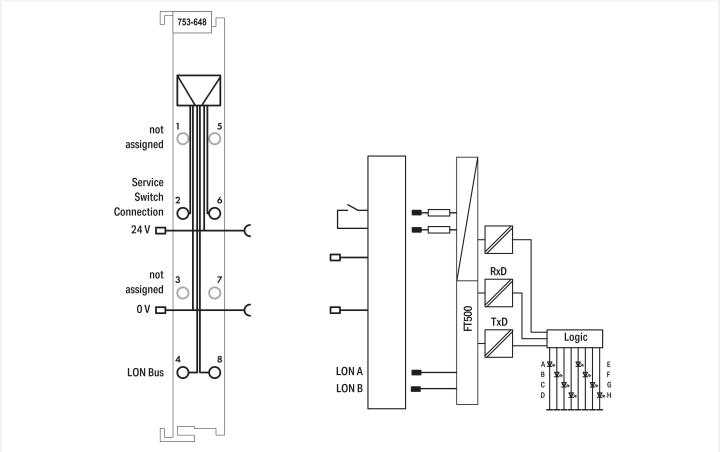

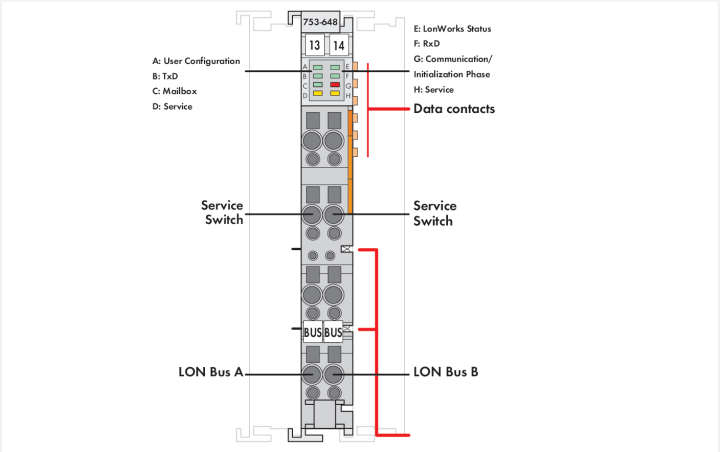

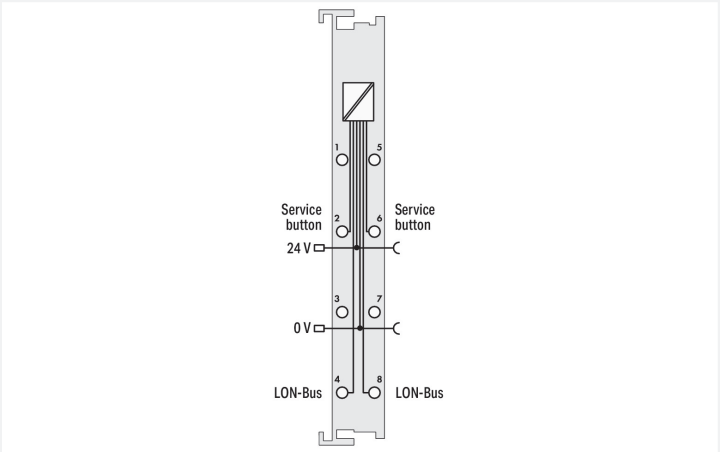

The 753-648 LON FTT Module complies with the ISO/IEC 14908 standard. The 1/2 inch (12 mm) wide module connects LON to 750 Series Controllers and I/O Modules (e.g., BACnet, KNX, EnOcean, DALI, MODBUS). It is a full-fledged and flexible LON device within LonWorks FT or LP networks. The module's network variable interface defines 249 network variables of any type and supports both LonMark objects and configuration properties.
LON network interface is defined via LON Configurator. This comprehensive and easy-to-use software tool is a part of the WAGO-I/O-PRO Software. Interface representations are programmed via IEC-61131-3 and can be easily used for further applications.
Fieldbus nodes are programmed via WAGO-I/O-PRO Software. WAGO provides a comprehensive IEC-61131-3 library of function blocks, simplifying the creation of complex control applications.
A maximum of two modules may be connected to one controller. However, the number of modules depends on the memory required by the IEC application and the type of controller. The module is supplied via 24 V power jumper contacts.

Technical data

Device-specific	Number of network variables: max. 254 (249 for application)
Transceiver	FTX2
Topology	per LON specification
Number of aliases (max.)	127
Transmission rate	0.078 Mbit/s
Transmission medium	Twisted pair – FTT
Transmission channel	1
Data width	24-byte data
Commissioning	via WAGO-I/O-CHECK or WAGO-I/O-*PRO* V2.3
Supply voltage (system)	5 VDC; via data contacts
Current consumption (system supply)	30 mA
Supply voltage (field)	24 VDC; via power jumper contacts (power supply via blade contact; transmission (field side supply voltage only) via spring contact)
Isolation	500 V system/field
Indicators	LED (A, B, C, E, F) green: user configuration, TxD, mailbox, LonWorks status, RxD; LED (G) red: communication/initialization phase; LED (D, H) yellow: service, service
Number of incoming power jumper contacts	2
Number of outgoing power jumper contacts	2

Connection Data

Connection technology: I/O	8 x CAGE CLAMP®
Connectable conductor materials	Copper
Connection type	Inputs/outputs
Solid conductor	0.08 … 2.5 mm² / 28 … 14 AWG
Fine-stranded conductor	0.08 … 2.5 mm² / 28 … 14 AWG
Strip length	9 … 10 mm / 0.35 … 0.39 inches

Physical data

Width	12 mm / 0.472 inches
Height	100 mm / 3.937 inches
Depth	69 mm / 2.717 inches
Depth from upper-edge of DIN-rail	61.8 mm / 2.433 inches

Mechanical data

Mounting type	DIN-35 rail
Pluggable connector	pluggable

Material data

Housing material	Polycarbonate; polyamide 6.6
Fire load	0.934 MJ
Weight	54.8 g
Conformity marking	CE

Continued on next page

Environmental requirements

Ambient temperature (operation)	0 … +55 °C
Ambient temperature (storage)	-40 … +85 °C
Protection type	IP20
Pollution degree	2 per IEC 61131-2
Operating altitude	0 … 2000 m / 0 … 6562 ft
Mounting position	Horizontal left, horizontal right, horizontal top, horizontal bottom, vertical top and vertical bottom
Relative humidity (without condensation)	95 %
Vibration resistance	Per IEC 60068-2-6
Shock resistance	15g per IEC 60068-2-27
EMC immunity to interference	per EN 61000-6-2
EMC emission of interference	per EN 61000-6-3
Exposure to pollutants	per IEC 60068-2-42 and IEC 60068-2-43
Permissible H_2S contaminant concentration at a relative humidity 75 %	10 ppm
Permissible SO_2 contaminant concentration at a relative humidity 75 %	25 ppm

Commercial data

Product Group	15 (I/O System)
PU (SPU)	1 pcs
Packaging type	Box
Country of origin	DE
GTIN	4050821475705
Customs tariff number	85389099990

Product Classification

UNSPSC	32151705
eCl@ss 10.0	27-24-26-08
eCl@ss 9.0	27-24-26-08
ETIM 9.0	EC001604
ETIM 10.0	EC001604
ECCN	NO US CLASSIFICATION

Environmental Product Compliance

CAS-No.	1303-86-2 1317-36-8 7439-92-1
REACH Candidate List Substance	Diboron trioxide Lead Lead monoxide
RoHS Compliance Status	Compliant,With Exemption
RoHS Exemption	6(c) 7(a) 7(c)-I 7(c)-II
SCIP notification number (Austria)	9e84adc4-d74b-46f4-9a6e-ef977e40ba4b
SCIP notification number (Belgium)	815fc152-56bc-426f-b353-530260488fb1
SCIP notification number (Bulgaria)	56a71b99-01fc-4b46-aa11-296168b8e04a
SCIP notification number (Czech Republic)	a1e2a4ac-e9f9-4e3d-9fe7-8ea7abedc6aa
SCIP notification number (Denmark)	99e44f75-257f-452d-bf58-73a7024519c9
SCIP notification number (Finland)	36914e76-9f98-46a0-9fa5-ec6f308959c5
SCIP notification number (France)	b52a6f58-e2ea-4d15-9083-2be837610563
SCIP notification number (Germany)	13ea95f9-8102-4136-989e-8376457f0079
SCIP notification number (Hungary)	dadccc40-0259-4026-805f-041ba07ebfad
SCIP notification number (Italy)	83c03e19-25ed-4538-a5a3-dc24b1bef630
SCIP notification number (Netherlands)	d3a66736-3769-4257-8399-cf27e0556762

Continued on next page

Environmental Product Compliance

SCIP notification number (Poland)	d40b0273-5dde-428b-b1c7-d69247043d45
SCIP notification number (Romania)	5c0d993e-cabb-4252-b28e-e7b03db19be9
SCIP notification number (Sweden)	9e6f7b42-efc6-4fad-a66f-8ecf502a5c3d

Approvals / Certificates

General approvals

Approval	Standard	Certificate Name
EAC GZO Almaty Standart	TP TC 020/2011	EAC CoC 03083
KC National Radio Research Agency	Article 58-2, Clause 3	MSIP-REM-W43-MSM750
UL Underwriters Laboratories Inc. (ORDINARY LOCATIONS)	UL 508	E175199

Declarations of conformity and manufacturer's declarations

Approval	Standard	Certificate Name
EU-Declaration of Conformity WAGO GmbH & Co. KG	-	-

Approvals for hazardous areas

Approval	Standard	Certificate Name
UL Underwriters Laboratories Inc. (HAZARDOUS LOCATIONS)	UL 121201	E198726

Downloads

Environmental Product Compliance

Compliance Search

Environmental Product Compliance 753-648

Documentation

Manual

Product Manual WAGO LON Configurator	V 1.0.0	pdf 4852.35 KB	
System Manual Series 750/753			
Product Manual LON FTT Module	V 1.0.0	pdf 983.64 KB	

System Description

750/753 Series I/O-System – General Product Information	pdf 953.35 KB	
Overview on WAGO-I/O-SYSTEM 750 approvals	pdf 770.48 KB	

Continued on next page

Bid Text			
753-648	15.11.2018	doc 26.50 KB	
753-648	19.02.2019	xml 4.50 KB	
ausschreiben.de 753-648			

Application Notes

Application Note CoDeSys 2.3			
Anwendungshinweis Address Table Entries der LON-Klemme 753-648	13.08.2013 23.09.2013	pdf 1155.19 KB	

CAD/CAE-Data

CAD data
2D/3D Models 753-648

CAE data
EPLAN Data Portal 753-648
WSCAD Universe 753-648
ZUKEN Portal 753-648

Runtime Software

Firmware			
0753-0648, LON®-FTT Schnittstelle	V 04 07.06.2022	zip 171.06 KB	

Libraries

Library			
Libraries for Building Automation CODESYS 2.3	2025-01-30 30.01.2025	zip 71441.83 KB	

Continued on next page

1 Compatible Products

1.1 Optional Accessories

1.1.1 DIN-rail

1.1.1.1 Mounting accessories



Item No.: 210-196
Aluminum carrier rail; 35 x 8.2 mm; 1.6 mm thick; 2 m long; unslotted; similar to EN 60715; silver-colored



Item No.: 210-198
Copper carrier rail; 35 x 15 mm; 2.3 mm thick; 2 m long; unslotted; according to EN 60715; copper-colored



Item No.: 210-197
Steel carrier rail; 35 x 15 mm; 1.5 mm thick; 2 m long; slotted; similar to EN 60715; silver-colored



Item No.: 210-114
Steel carrier rail; 35 x 15 mm; 1.5 mm thick; 2 m long; unslotted; similar to EN 60715; silver-colored



Item No.: 210-118
Steel carrier rail; 35 x 15 mm; 2.3 mm thick; 2 m long; unslotted; according to EN 60715; silver-colored



Item No.: 210-112
Steel carrier rail; 35 x 7.5 mm; 1 mm thick; 2 m long; slotted; according to EN 60715; "Hole width 25 mm; silver-colored



Item No.: 210-113
Steel carrier rail; 35 x 7.5 mm; 1 mm thick; 2 m long; unslotted; according to EN 60715; silver-colored

1.1.2 Marking

1.1.2.1 Group marker carrier



Item No.: 750-107
Group marker carrier

1.1.2.2 Marker



Item No.: 2009-145/000-006
Mini-WSB Inline; for Smart Printer; 1700 pieces on roll; stretchable 5 - 5.2 mm; plain; snap-on type; blue



Item No.: 2009-145/000-007
Mini-WSB Inline; for Smart Printer; 1700 pieces on roll; stretchable 5 - 5.2 mm; plain; snap-on type; gray



Item No.: 2009-145/000-023
Mini-WSB Inline; for Smart Printer; 1700 pieces on roll; stretchable 5 - 5.2 mm; plain; snap-on type; green



Item No.: 2009-145/000-012
Mini-WSB Inline; for Smart Printer; 1700 pieces on roll; stretchable 5 - 5.2 mm; plain; snap-on type; orange



Item No.: 2009-145/000-005
Mini-WSB Inline; for Smart Printer; 1700 pieces on roll; stretchable 5 - 5.2 mm; plain; snap-on type; red



Item No.: 2009-145/000-024
Mini-WSB Inline; for Smart Printer; 1700 pieces on roll; stretchable 5 - 5.2 mm; plain; snap-on type; violet



Item No.: 2009-145
Mini-WSB Inline; for Smart Printer; 1700 pieces on roll; stretchable 5 - 5.2 mm; plain; snap-on type; white



Item No.: 2009-145/000-002
Mini-WSB Inline; for Smart Printer; 1700 pieces on roll; stretchable 5 - 5.2 mm; plain; snap-on type; yellow



Item No.: 248-501/000-006
Mini-WSB marking card; as card; not stretchable; plain; snap-on type; blue



Item No.: 248-501/000-007
Mini-WSB marking card; as card; not stretchable; plain; snap-on type; gray



Item No.: 248-501/000-023
Mini-WSB marking card; as card; not stretchable; plain; snap-on type; green



Item No.: 248-501/000-017
Mini-WSB marking card; as card; not stretchable; plain; snap-on type; light green



Item No.: 248-501/000-012
Mini-WSB marking card; as card; not stretchable; plain; snap-on type; orange



Item No.: 248-501/000-005
Mini-WSB marking card; as card; not stretchable; plain; snap-on type; red



Item No.: 248-501/000-024
Mini-WSB marking card; as card; not stretchable; plain; snap-on type; violet



Item No.: 248-501
Mini-WSB marking card; as card; not stretchable; plain; snap-on type; white



Item No.: 248-501/000-002
Mini-WSB marking card; as card; not stretchable; plain; snap-on type; yellow

Continued on next page

1.1.2.3 Marker carrier



Item No.: 750-103
Group marker carrier

1.1.3 Pluggable connector

1.1.3.1 Coding



Item No.: 753-150
753 Series coding elements

1.1.4 Shield termination

1.1.4.1 Shield clamping saddles



Item No.: 790-108
Shield clamping saddle; 11 mm wide; diameter of compatible conductor; 3 … 8 mm



Item No.: 790-208
Shield clamping saddle; 12.4 mm wide; 3 … 8 mm



Item No.: 790-116
Shield clamping saddle; 19 mm wide; diameter of compatible conductor; 7 … 16 mm



Item No.: 790-216
Shield clamping saddle; 21.8 mm wide; 6 … 16 mm



Item No.: 790-124
Shield clamping saddle; 27 mm wide; diameter of compatible conductor; 6 … 24 mm



Item No.: 790-220
Shield clamping saddle; 30 mm wide; 6 … 20 mm



Item No.: 790-140
Shield clamping saddle; diameter of compatible conductor

1.1.5 Supply module

1.1.5.1 Supply module



Item No.: 750-612
Power Supply; 0 … 230 V AC/DC



Item No.: 753-612
Power Supply; 0 … 230 V AC/DC



Item No.: 750-602
Power Supply; 24 VDC



Item No.: 753-602
Power Supply; 24 VDC



Item No.: 750-601
Power Supply; 24 VDC; fuse holder



Item No.: 750-610
Power Supply; 24 VDC; fuse holder; Diagnostics

1.1.6 System enclosure

1.1.6.1 System enclosure



Item No.: 850-825
IP65 enclosure; Aluminium (RAL 7032); WxHxD (160x100x160 mm); 9 x M12, 4 x M20



Item No.: 850-826
IP65 enclosure; Aluminium (RAL 7032); WxHxD (240x100x160 mm); 4 x M20, 4 x M16, 14 x M12 cable grip



Item No.: 850-827
IP65 enclosure; Aluminium (RAL 7032); WxHxD (320x100x160 mm); 4 x M20, 8 x M16, 17 x M12 cable grip



Item No.: 850-828
IP65 enclosure; Aluminium (RAL 7032); WxHxD (480x100x160 mm); 4 x M20, 10 x M16, 35 x M12 cable grip



Item No.: 850-826/002-000
IP65 enclosure; Aluminium (RAL 7035); WxHxD (240x100x160 mm); 4 x M20, 4 x M16, 14 x M12 cable grip



Item No.: 850-827/002-000
IP65 enclosure; Aluminium (RAL 7035); WxHxD (320x100x160 mm); 4 x M20, 8 x M16, 17 x M12 cable grip



Item No.: 850-828/002-000
IP65 enclosure; Aluminium (RAL 7035); WxHxD (480x100x160 mm); 4 x M20, 10 x M16, 35 x M12 cable grip



Item No.: 850-834
IP65 enclosure; Polyester (RAL 7032); WxHxD (164x100x164 mm); 9 x M12, 4 x M20

Continued on next page

1.1.6.1 System enclosure



Item No.: 850-835
IP65 enclosure; Polyester (RAL 7032); WxHxD (244x100x164 mm); 4 x M20, 4 x M16, 14 x M12 cable grip



Item No.: 850-836
IP65 enclosure; Polyester (RAL 7032); WxHxD (324x100x164 mm); 4 x M20, 8 x M16, 17 x M12 cable grip



Item No.: 850-814/002-000
IP65 enclosure; Sheet steel (RAL 7035); WxHxD (200x120x200 mm); without flange plate



Item No.: 850-815/002-000
IP65 enclosure; Sheet steel (RAL 7035); WxHxD (300x120x200 mm); without flange plate



Item No.: 850-816/002-000
IP65 enclosure; Sheet steel (RAL 7035); WxHxD (400x120x200 mm); without flange plate



Item No.: 850-817/002-000
IP65 enclosure; Sheet steel (RAL 7035); WxHxD (600x120x200 mm); without flange plate