Data Sheet | Item Number: 756-1202/060-020

ETHERNET cable; M12D plug; angled; 4-pole; Length: 2 m

https://www.wago.com/756-1202/060-020



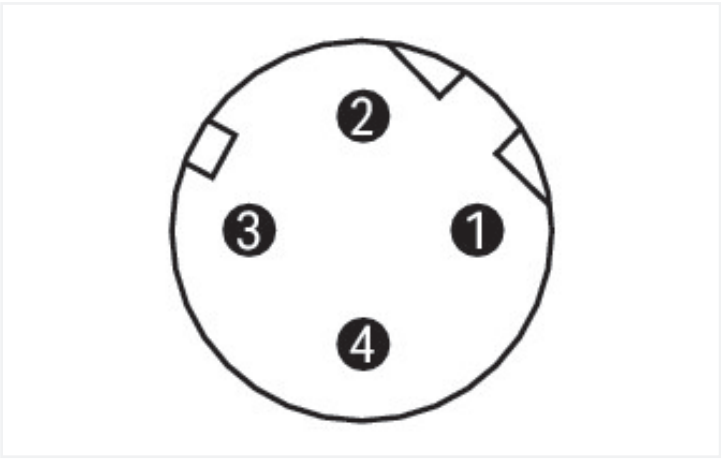

Color: green

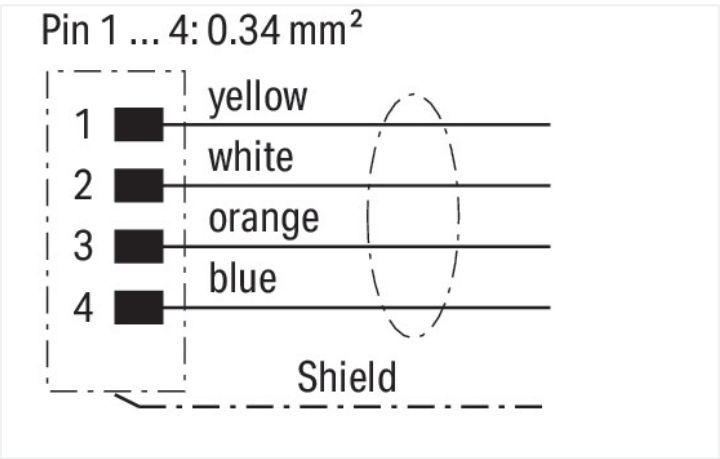

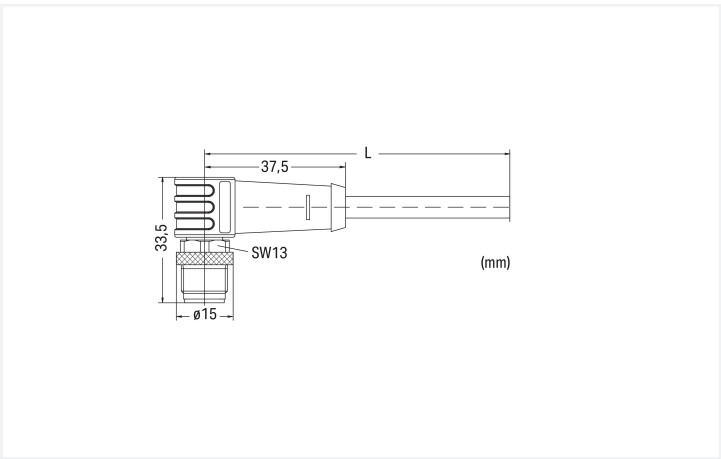

Dimensions in mm

Short description:

- PUR GN, halogen-free
- CAT 5e ES
- Suitable for drag chains
- Silicon- and CFC-free
- High resistance to microbes, hydrolysis, oil, ozone, chemicals and UV radiation
- Cable used: UL listed

Technical data

General information

Operating voltage	250 V
Operating current	4 A
Rated impulse withstand voltage	2 kV
Insulation resistance	≥ 5 x 10^8 Ω/km
Contact resistance	10 mΩ
Conductor resistance	< 57 Ω/km
Pollution degree	3/2 per IEC 60664-1
Protection type	IP67

General information

Ambient (operating) temperature (static)	-40 … +70 °C
Ambient (operating) temperature (dynamic)	-40 … +70 °C

Drag chain compatible

Bending diameter (min.)	200 mm
Bending radius	Single: 5 x cable diameter (min.); Multiple: 7.5 x cable diameter (min.)
Bending cycles	3 million
Acceleration (min.)	4 m/s²
Travel speed (max.)	4 m/s
Travel path (horizontal) max.	10 m

Cable

Cable length	2 m
Type code	02YH(ST)C11Y 2x2x0.75/1.5-100 LI GN VZN FRNC, shielded
Overall shield	Overlapped aluminum-laminated foil and tinned copper braid, optical coverage approx. 85 %
Conductor configuration	Bare copper wire (7 x 0.25 mm)
Conductor insulation	Halogen-free PE
Sheath material	Polyurethane (PUR), halogen-free per VDE 0250 Part 818, flame resistant per IEC 60332-1-2

Connector

Connection type	M12 plug - free end
Pole number	4
Cable connection direction to mating direction	90 °
Connector interface coding (cable/adapter) 1 1	D-coded
Housing material	TPU/TPU, black (~ RAL 9005)
Contact material	CuZn
Tightening torque	1 Nm

Commercial data

PU (SPU)	1 pcs
Packaging type	Box
Country of origin	DE
GTIN	4045454521790
Customs tariff number	85444210000

Product Classification

UNSPSC	26121609
eCl@ss 10.0	27-06-18-01
eCl@ss 9.0	27-06-18-01
ETIM 9.0	EC002599
ETIM 10.0	EC002599
ECCN	NO US CLASSIFICATION

Environmental Product Compliance

RoHS Compliance Status	Compliant,No Exemption

Approvals / Certificates

General approvals

Approval	Standard	Certificate Name
UL Underwriters Laboratories Inc.	UL 2238	E519602

Continued on next page

Downloads

Environmental Product Compliance

Compliance Search

Environmental Product Compliance 756-1202/060-020

CAD/CAE-Data

CAE data

WSCAD Universe 756-1202/060-020