Data Sheet | Item Number: 756-5112/030-100

Sensor/Actuator cable; M8 plug; angled; 3-pole; Length: 10 m

https://www.wago.com/756-5112/030-100



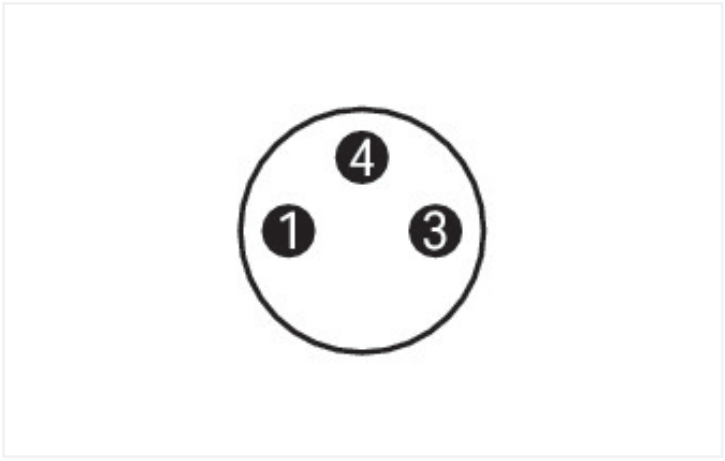

Similar to illustration

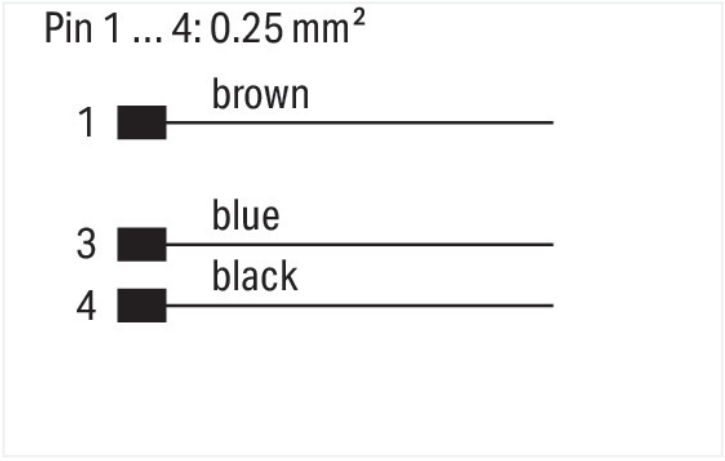

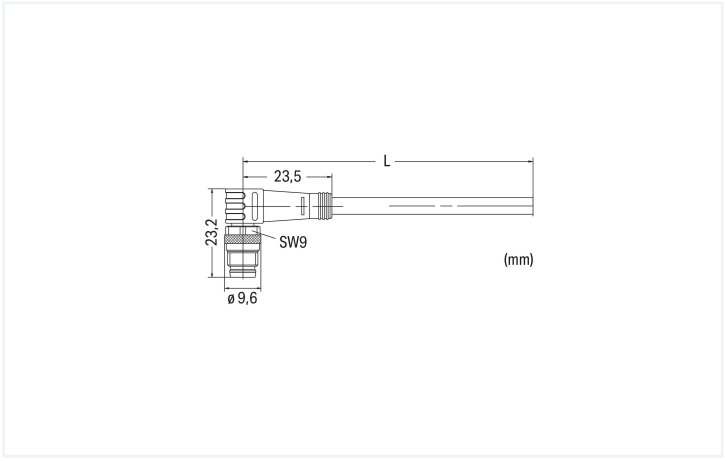

Dimensions in mm

Short description:

- PUR, halogen-free
- Suitable for drag chains
- Good resistance to microbes, hydrolysis, oil, chemicals and UV radiation.
- Good chemical resistance.
- Cable used: UL listed

Technical data

General information

Operating voltage	AC/DC 60 V
Operating current	4 A
Rated impulse withstand voltage	1.5 kV
Insulation resistance	>10^9 Ω
Contact resistance	10 mΩ
Conductor resistance	≤ 60 Ω/km
Pollution degree	3 per VDE 0110
Protection type	IP67
Ambient (operating) temperature (static)	-50 … +90 °C

General information

Ambient (operating) temperature (dynamic)	-25 … +90 °C

Drag chain compatible

Bending radius	10 x cable diameter (min.)
Bending cycles	2 million
Acceleration (min.)	5 m/s²
Travel speed (max.)	3.33 m/s
Travel path (horizontal) max.	5 m
Travel path (vertical) max.	2 m
Torsional capacity	180 °/m

Cable

Cable length	10 m
Type code	LiF9YH-11YH or LiF9YC11YFHF
Conductor configuration	Bare copper wire, fine-stranded (42 x 0.1 mm)
Conductor insulation	PP9Y (halogen-free)
Sheath material	Polyurethane (PUR), halogen-free per DIN VDE 0472 Part 815, flame resistant per IEC 332-2, self-extinguishing
Sheathed cable color	black

Connector

Connection type	M8 plug - free end
Pole number	3
Cable connection direction to mating direction	90 °
Housing material	Polyurethane (PUR)
Contact material	CuSn
Tightening torque	0.6 Nm

Commercial data

PU (SPU)	1 pcs
Packaging type	Box
Country of origin	HU
GTIN	4045454941987
Customs tariff number	85444290900

Product Classification

UNSPSC	26121604
eCl@ss 10.0	27-06-03-11
eCl@ss 9.0	27-06-03-11
ETIM 9.0	EC001855
ETIM 10.0	EC001855
ECCN	NO US CLASSIFICATION

Environmental Product Compliance

RoHS Compliance Status	Compliant,With Exemption
RoHS Exemption	6(c)
SCIP notification number (Austria)	eaa5bce9-6f8c-4383-8902-ce3d3507dcd4
SCIP notification number (Belgium)	9bd1bb59-fef5-43e2-b89e-e43d00a7e783
SCIP notification number (Bulgaria)	04fd4688-c1ba-4bc3-b54f-d3f69d62ed9d
SCIP notification number (Czech Republic)	2c66d4ff-fcc9-49e6-931f-e762e5afffdf
SCIP notification number (Denmark)	2d2a1bfa-2ec3-43f1-abbe-8c004a3fb152
SCIP notification number (Finland)	ebbc8e0e-6f8d-4c38-b36e-ba482787e949
SCIP notification number (France)	2d5021cd-7b12-40d6-a442-484ab20078f7
SCIP notification number (Germany)	3c8e2a24-a8ca-40d3-a0f8-550baa39d490
SCIP notification number (Hungary)	3a83e0ee-e90b-4662-bad2-f0543835e7b3
SCIP notification number (Italy)	d37cb6c7-6e4d-4819-8670-5691a0d684ae
SCIP notification number (Netherlands)	864bdbf2-3ddf-434b-9987-8c3f5237ca22
SCIP notification number (Poland)	ab355d8d-236a-4dc7-9317-2608ac3b5ceb
SCIP notification number (Romania)	42d348b3-855e-423d-83fa-8ea4c0a981f9
SCIP notification number (Sweden)	a766d9b4-e414-4e8f-b614-a098584c9574

Continued on next page

Approvals / Certificates

General approvals

Approval	Standard	Certificate Name
UL Underwriters Laboratories Inc.	UL 2238	E519602

Downloads

Environmental Product Compliance

Compliance Search

Environmental Product Compliance
756-5112/030-100

Documentation

System Description

IP67 Cables and Plug-gable Connectors	pdf 157.80 KB	

Bid Text

756-5112/030-100	19.02.2019	xml 3.21 KB
756-5112/030-100	20.09.2017	doc 25.50 KB

CAD/CAE-Data

CAE data

WSCAD Universe
756-5112/030-100