Data Sheet | Item Number: 756-5302/060-100

Sensor/Actuator cable; M12A socket; angled; 5-pole; Length: 10 m

https://www.wago.com/756-5302/060-100



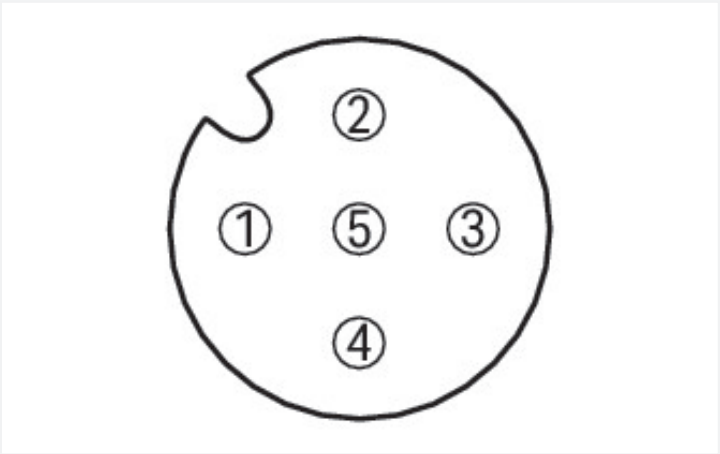

Similar to illustration

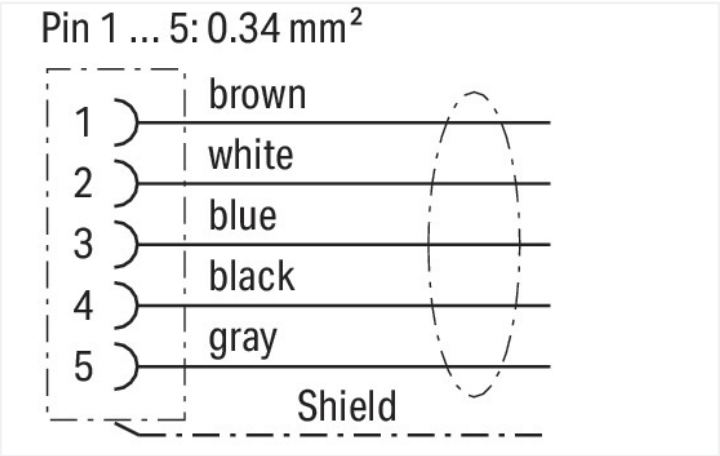

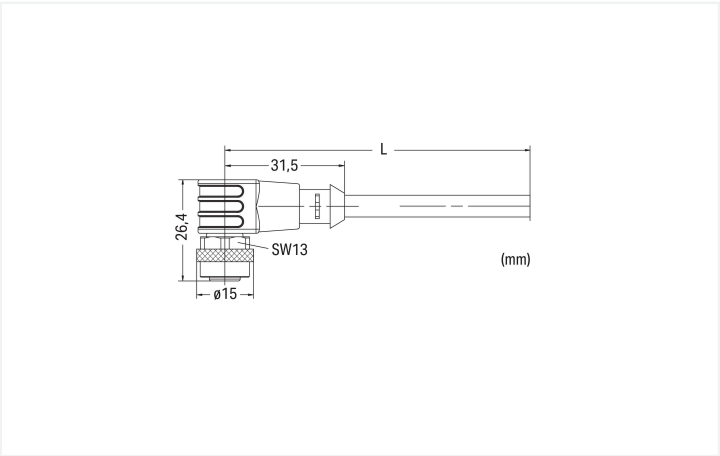

Dimensions in mm

Short description:

- PUR, halogen-free
- Suitable for drag chains
- High resistance to microbes, hydrolysis, oil, chemicals and UV radiation
- High chemical resistance
- Cable used: UL listed

Technical data

General information

Operating voltage	250 VAC/DC
Operating current	4 A
Rated impulse withstand voltage	1.5 kV
Insulation resistance	≥1.6 x 10^{10} Ω/km
Contact resistance	10 mΩ
Conductor resistance	< 57 Ω/km
Pollution degree	3 per VDE 0110
Protection type	IP67
Ambient (operating) temperature (static)	-50 … +90 °C

General information

Ambient (operating) temperature (dynamic)	-25 … +90 °C

Drag chain compatible

Bending radius	Fixed: >4xØ; Flexible: >7.5xØ
Bending cycles	2 million
Acceleration (min.)	10 m/s²
Travel speed (max.)	4 m/s
Travel path (horizontal) max.	15 m
Torsional capacity	180 °/m

Cable

Cable length	10 m
Type code	Li9YC11Y-HF 5x0.34 mm²
Overall shield	Tinned copper braid, optical coverage approx. 80 %
Conductor configuration	Bare copper wire (7 x 0.25 mm)
Conductor insulation	Halogen-free PE
Sheath material	Polyurethane (PUR), halogen-free per DIN VDE 0472 Part 815, flame resistant per IEC 332-2, self-extinguishing
Sheathed cable color	black

Connector

Connection type	M12 Socket - free end
Pole number	5
Cable connection direction to mating direction	90 °
Connector interface coding (cable/adapter) 1 1	A-coded
Housing material	Polyurethane (PUR)
Contact material	CuSn
Tightening torque	1 Nm

Commercial data

PU (SPU)	1 pcs
Packaging type	Box
Country of origin	HU
GTIN	4045454942045
Customs tariff number	85444290900

Product Classification

UNSPSC	26121609
eCl@ss 10.0	27-06-03-11
eCl@ss 9.0	27-06-03-11
ETIM 9.0	EC001855
ETIM 10.0	EC001855
ECCN	NO US CLASSIFICATION

Environmental Product Compliance

RoHS Compliance Status	Compliant,With Exemption
RoHS Exemption	6(c)
SCIP notification number (Austria)	31a04846-820e-4691-acc2-f5e2b3fd55ca
SCIP notification number (Belgium)	d161e4e2-b0f7-43c0-9c80-0d8937b3ccdd
SCIP notification number (Bulgaria)	2a057197-0ce9-4e62-be7d-0164ad2c3ea1
SCIP notification number (Czech Republic)	2ddbbbab-6690-44a4-9bfd-1d407adc7b21
SCIP notification number (Denmark)	4d71ba8c-b5b7-4a56-9a70-f183f51ffdca
SCIP notification number (Finland)	ac53f7bc-1622-45c8-bad2-612892508986
SCIP notification number (France)	12c0afff-2fc5-4cf6-aaec-8708de81a6ef
SCIP notification number (Germany)	aebd58cd-6d61-445c-966e-07a9850fe409
SCIP notification number (Hungary)	553fca99-b131-4063-a071-990d8b7c504a
SCIP notification number (Italy)	de80b065-4389-4086-b0a4-2fe8189e0a9a
SCIP notification number (Netherlands)	6990ac84-d07f-43e3-a311-00c30bd496b0
SCIP notification number (Poland)	458ff0bc-e7be-41fb-8e6d-5871571f1920
SCIP notification number (Romania)	f9a1cbdc-b5a4-4828-b589-1b4af215d812
SCIP notification number (Sweden)	ba944927-d9cc-4ae9-b4e6-04aabfc2c714

Continued on next page

Approvals / Certificates

General approvals

Approval	Standard	Certificate Name
UL Underwriters Laboratories Inc.	UL 2238	E519602

Downloads

Environmental Product Compliance

Compliance Search

Environmental Product Compliance
756-5302/060-100

Documentation

System Description

IP67 Cables and Plug-gable Connectors	pdf 157.80 KB	

Bid Text

756-5302/060-100	19.02.2019	xml 3.29 KB
756-5302/060-100	20.09.2017	doc 26.50 KB

CAD/CAE-Data

CAE data

WSCAD Universe
756-5302/060-100