Data Sheet | Item Number: 756-5312/050-015

Sensor/Actuator cable; M12A plug; angled; 5-pole; Length: 1.5 m

https://www.wago.com/756-5312/050-015



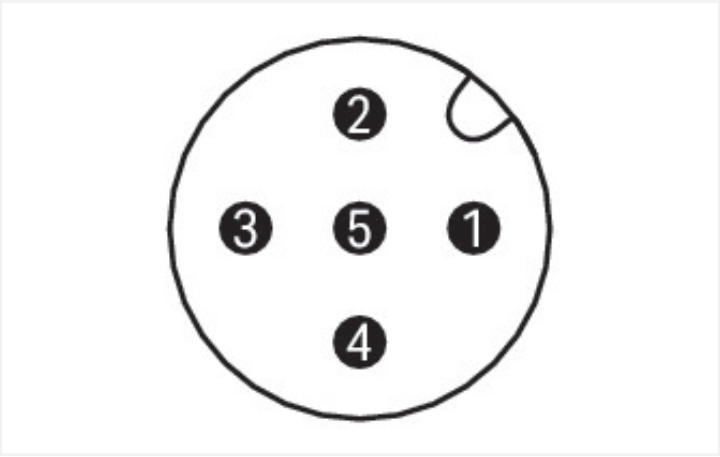

Similar to illustration

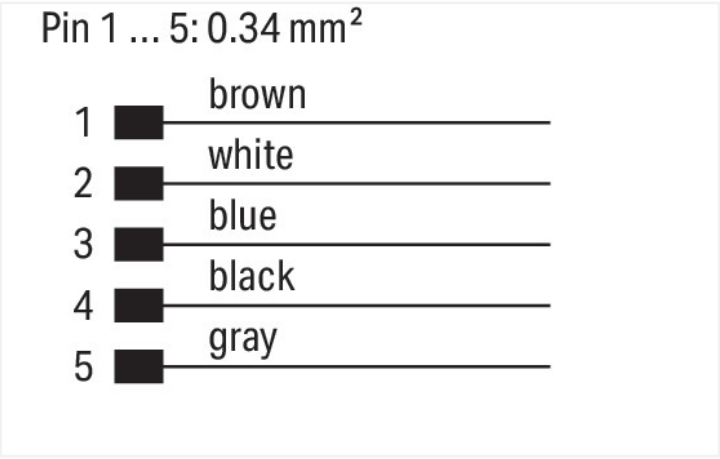

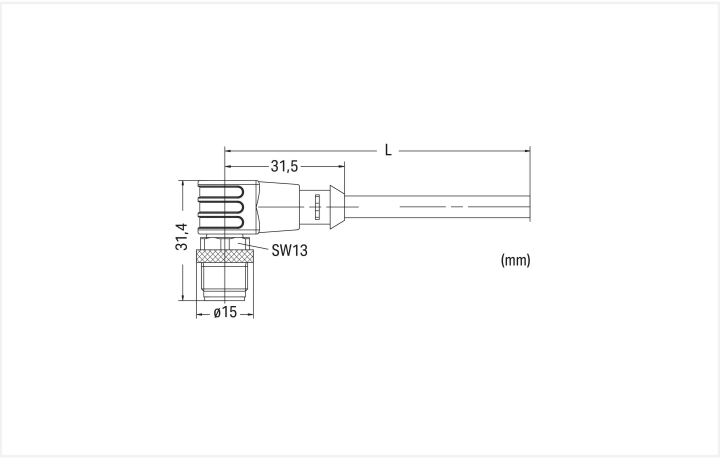

Dimensions in mm

Short description:

- PUR, halogen-free
- Suitable for drag chains
- High resistance to microbes, hydrolysis, oil, chemicals and UV radiation
- High chemical resistance
- Cable used: UL listed

Technical data

General information

Operating voltage	250 VAC/DC
Operating current	4 A
Rated impulse withstand voltage	1.5 kV
Insulation resistance	>10^9 Ω
Contact resistance	10 mΩ
Conductor resistance	≤ 60 Ω/km
Pollution degree	3 per VDE 0110
Protection type	IP67
Ambient (operating) temperature (static)	-50 … +90 °C

General information

Ambient (operating) temperature (dynamic)	-25 … +90 °C

Continued on next page

Drag chain compatible

Bending radius	10 x cable diameter (min.)
Bending cycles	2 million
Acceleration (min.)	5 m/s²
Travel speed (max.)	3.33 m/s
Travel path (horizontal) max.	5 m
Travel path (vertical) max.	2 m
Torsional capacity	180 °/m

Cable

Cable length	1.5 m
Type code	LiF9YH-11YH or LiF9YC11YFHF
Conductor configuration	Bare copper wire, fine-stranded (42 x 0.1 mm)
Conductor insulation	PP9Y (halogen-free)
Sheath material	Polyurethane (PUR), halogen-free per DIN VDE 0472 Part 815, flame resistant per IEC 332-2, self-extinguishing
Sheathed cable color	black

Connector

Connection type	M12 plug - free end
Pole number	5
Cable connection direction to mating direction	90 °
Connector interface coding (cable/adapter) 1 1	A-coded
Housing material	Polyurethane (PUR)
Contact material	CuSn
Tightening torque	1 Nm

Commercial data

PU (SPU)	1 pcs
Packaging type	Box
Country of origin	HU
GTIN	4045454942335
Customs tariff number	85444290900

Product Classification

UNSPSC	26121604
eCl@ss 10.0	27-06-03-11
eCl@ss 9.0	27-06-03-11
ETIM 9.0	EC001855
ETIM 10.0	EC001855
ECCN	NO US CLASSIFICATION

Environmental Product Compliance

RoHS Compliance Status	Compliant,With Exemption
RoHS Exemption	6(c)
SCIP notification number (Austria)	ea7e1af0-9594-4774-889c-f59f87086c18
SCIP notification number (Belgium)	6e024f38-a461-434c-af2d-8fd2b7bbdb14
SCIP notification number (Bulgaria)	b70e9b33-dc18-4a11-bcc2-b574e9125043
SCIP notification number (Czech Republic)	c86c98e9-8515-461f-8fc2-62e5439a7e01
SCIP notification number (Denmark)	866ff662-bf47-4901-bcf7-82bd7611b5cb
SCIP notification number (Finland)	d7e7054e-0683-4170-88b0-a4d5b06f258f
SCIP notification number (France)	28467bfe-2f71-480e-a113-3bef5728e83b
SCIP notification number (Germany)	aad1ecd1-83e2-4804-bb78-1ef5c3e03601
SCIP notification number (Hungary)	be2d29cc-fa9e-4d4a-b70e-5f51ee4bcda9
SCIP notification number (Italy)	4e272cfb-10e1-4d5f-9312-35083a2d1f92
SCIP notification number (Netherlands)	5315d7c4-400f-4734-8fa2-e512cd0eecba
SCIP notification number (Poland)	689614f6-6b7c-4bb3-bc03-9747d2685132
SCIP notification number (Romania)	ee97e525-aed2-4b13-9bbb-2c4ad13df28d
SCIP notification number (Sweden)	7ef0e214-2dc7-4a61-9104-084a0b5380ae

Continued on next page

Approvals / Certificates

General approvals

Approval	Standard	Certificate Name
UL Underwriters Laboratories Inc.	UL 2238	E519602

Downloads

Environmental Product Compliance

Compliance Search

Environmental Product Compliance
756-5312/050-015

Documentation

System Description

IP67 Cables and Plug-gable Connectors	pdf 157.80 KB	

Bid Text

756-5312/050-015	19.02.2019	xml 3.27 KB
756-5312/050-015	20.09.2017	doc 26.50 KB

CAD/CAE-Data

CAE data

WSCAD Universe
756-5312/050-015