Data Sheet | Item Number: 756-5312/060-050

Sensor/Actuator cable; M12A plug; angled; 5-pole; Length: 5 m

https://www.wago.com/756-5312/060-050



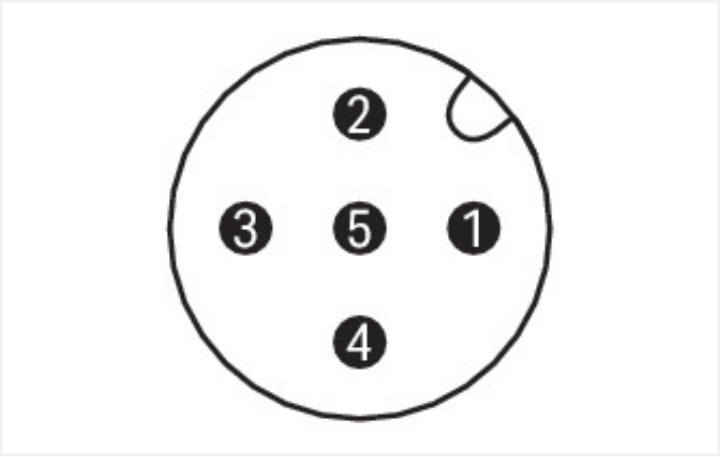

Similar to illustration

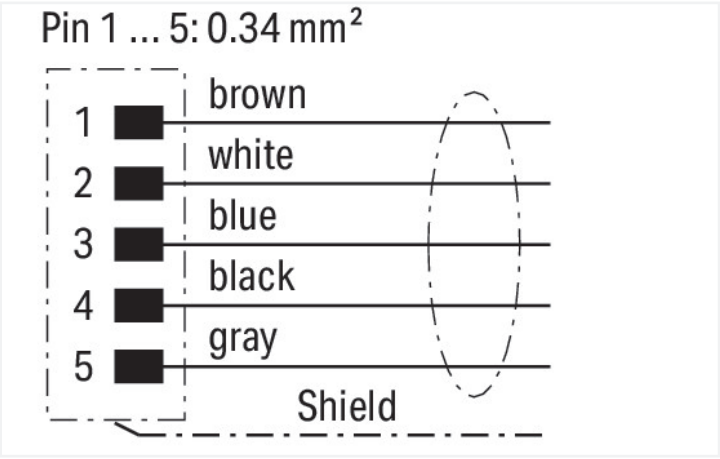

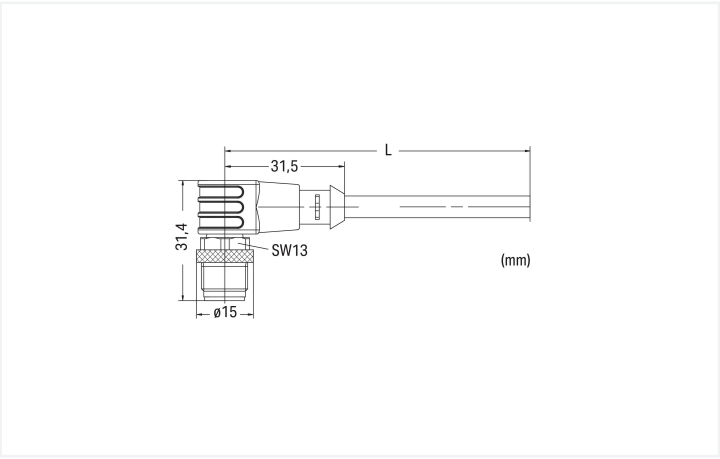

Dimensions in mm

Short description:

- PUR, halogen-free
- Suitable for drag chains
- High resistance to microbes, hydrolysis, oil, chemicals and UV radiation
- High chemical resistance
- Cable used: UL listed

Technical data

General information

Operating voltage	250 VAC/DC
Operating current	4 A
Rated impulse withstand voltage	1.5 kV
Insulation resistance	>10^9 Ω
Contact resistance	10 mΩ
Conductor resistance	≤ 60 Ω/km
Pollution degree	3 per VDE 0110
Protection type	IP67
Ambient (operating) temperature (static)	-50 … +90 °C

General information

Ambient (operating) temperature (dynamic)	-25 … +90 °C

Drag chain compatible

Bending radius	10 x cable diameter (min.)
Bending cycles	2 million
Acceleration (min.)	5 m/s²
Travel speed (max.)	3.33 m/s
Travel path (horizontal) max.	5 m
Travel path (vertical) max.	2 m
Torsional capacity	180 °/m

Cable

Cable length	5 m
Type code	LiF9YH-11YH or LiF9YC11YFHF
Conductor configuration	Bare copper wire, fine-stranded (42 x 0.1 mm)
Conductor insulation	PP9Y (halogen-free)
Sheath material	Polyurethane (PUR), halogen-free per DIN VDE 0472 Part 815, flame resistant per IEC 332-2, self-extinguishing
Sheathed cable color	black

Connector

Connection type	M12 plug - free end
Pole number	5
Cable connection direction to mating direction	90 °
Connector interface coding (cable/adapter) 1 1	A-coded
Housing material	Polyurethane (PUR)
Contact material	CuSn
Tightening torque	1 Nm

Commercial data

PU (SPU)	1 pcs
Packaging type	Box
Country of origin	HU
GTIN	4045454942366
Customs tariff number	85444290900

Product Classification

UNSPSC	26121609
eCl@ss 10.0	27-06-03-11
eCl@ss 9.0	27-06-03-11
ETIM 9.0	EC001855
ETIM 10.0	EC001855
ECCN	NO US CLASSIFICATION

Environmental Product Compliance

RoHS Compliance Status	Compliant,With Exemption
RoHS Exemption	6(c)
SCIP notification number (Austria)	396a52d0-1846-428a-94f9-d28c42d8e2c2
SCIP notification number (Belgium)	e44d5b20-00db-4394-b20f-e70cf3411d8b
SCIP notification number (Bulgaria)	e947d9fc-0333-4b49-91c5-4fae8293a11a
SCIP notification number (Czech Republic)	8bf8695f-369a-41ca-944b-be40a0016f6d
SCIP notification number (Denmark)	52d80822-0ddb-4fda-86de-15c560a44a92
SCIP notification number (Finland)	153d77ec-07ca-4a52-8368-fdeef677bc81
SCIP notification number (France)	9e5bc608-5413-4ad2-895c-dc364e97a9df
SCIP notification number (Germany)	ee013b66-f756-443f-99e2-cb2c3b17cba3
SCIP notification number (Hungary)	55e5b69a-bb88-43d2-bd38-f753aa3eb037
SCIP notification number (Italy)	45a40c65-b3c4-441e-bc37-f6daab8ae910
SCIP notification number (Netherlands)	eb3a1f4f-2a45-45ae-8a20-dab051a402ba
SCIP notification number (Poland)	caecdc9a-9699-4a94-879f-3b2f02798199
SCIP notification number (Romania)	5961bc02-f514-4139-acd1-ef6bb0b16f4b
SCIP notification number (Sweden)	ee0ee69e-8609-4744-8bbb-a1adc4a9b081

Continued on next page

Approvals / Certificates

General approvals

Approval	Standard	Certificate Name
UL Underwriters Laboratories Inc.	UL 2238	E519602

Downloads

Environmental Product Compliance

Compliance Search

Environmental Product Compliance
756-5312/060-050

Documentation

System Description

IP67 Cables and Plug-gable Connectors	pdf 157.80 KB	

Bid Text

756-5312/060-050	20.09.2017	doc 27.00 KB
756-5312/060-050	19.02.2019	xml 3.29 KB

CAD/CAE-Data

CAE data

WSCAD Universe
756-5312/060-050