Data Sheet | Item Number: 756-5402/050-020

Sensor/Actuator cable; M12A socket; straight; M12A plug; angled; 5-pole; Length: 2 m

https://www.wago.com/756-5402/050-020



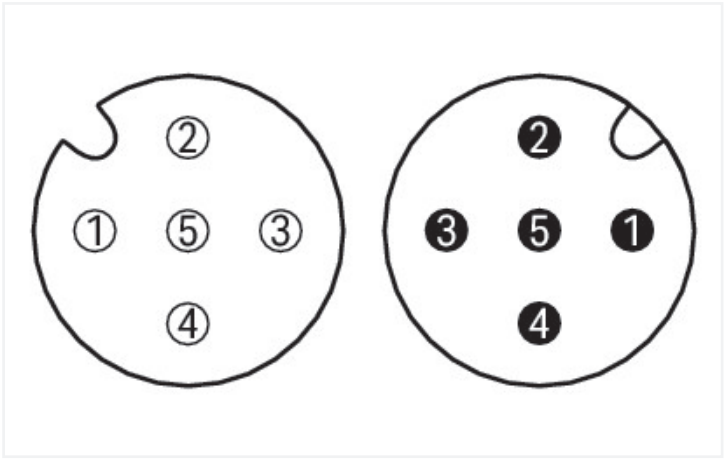

Similar to illustration

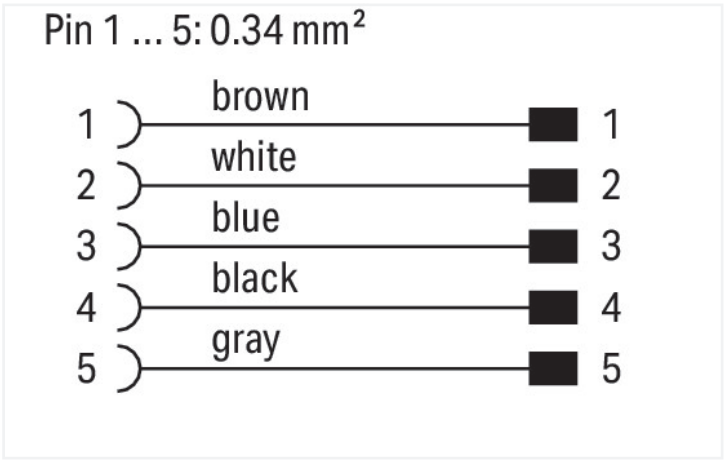

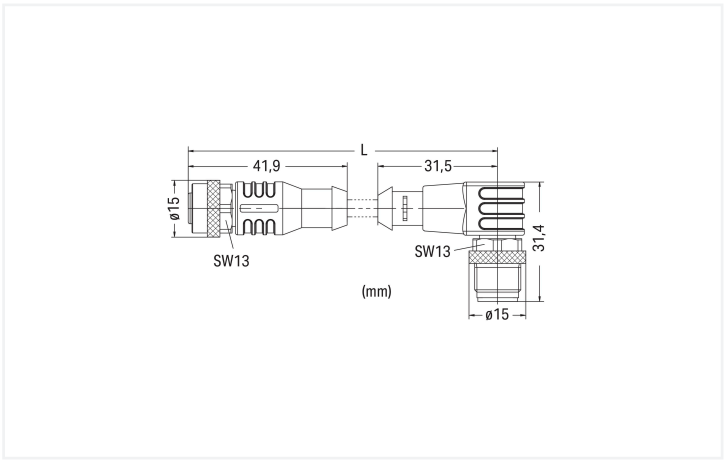

Dimensions in mm

Short description:

- PUR, halogen-free
- Suitable for drag chains
- High resistance to microbes, hydrolysis, oil, chemicals and UV radiation
- High chemical resistance
- Cable used: UL listed

Technical data

General information

Operating voltage	250 VAC/DC
Operating current	4 A
Rated impulse withstand voltage	1.5 kV
Insulation resistance	>10^9 Ω
Contact resistance	10 mΩ
Conductor resistance	≤ 60 Ω/km
Pollution degree	3 per VDE 0110
Protection type	IP67
Ambient (operating) temperature (static)	-50 … +90 °C

General information

Ambient (operating) temperature (dynamic)	-25 … +90 °C

Drag chain compatible

Bending radius	10 x cable diameter (min.)
Bending cycles	2 million
Acceleration (min.)	5 m/s²
Travel speed (max.)	3.33 m/s
Travel path (horizontal) max.	5 m
Travel path (vertical) max.	2 m
Torsional capacity	180 °/m

Cable

Cable length	2 m
Type code	LiF9YH-11YH or LiF9YC11YFHF
Conductor configuration	Bare copper wire, fine-stranded (42 x 0.1 mm)
Conductor insulation	PP9Y (halogen-free)
Sheath material	Polyurethane (PUR), halogen-free per DIN VDE 0472 Part 815, flame resistant per IEC 332-2, self-extinguishing
Sheathed cable color	black

Connector

Connection type	M12 Socket - M12 plug
Pole number	5
Cable connection direction to mating direction	0 °
Cable connection direction to mating direction (2)	90 °
Connector interface coding (cable/adapter) 1 1	A-coded
Connector interface coding (cable/adapter) 2 1	A-coded
Housing material	Polyurethane (PUR)
Contact material	CuSn
Tightening torque	1 Nm

Commercial data

PU (SPU)	10 (1) pcs
Packaging type	Box
Country of origin	HU
GTIN	4044918975643
Customs tariff number	85444290900

Product Classification

UNSPSC	26121604
eCl@ss 10.0	27-06-03-11
eCl@ss 9.0	27-06-03-11
ETIM 9.0	EC001855
ETIM 10.0	EC001855
ECCN	NO US CLASSIFICATION

Environmental Product Compliance

RoHS Compliance Status	Compliant,With Exemption
RoHS Exemption	6(c)
SCIP notification number (Austria)	984f482e-c1ca-48b5-ba64-c075a4afe022
SCIP notification number (Belgium)	2257b797-a569-43d5-a0e2-63f22ea4be8d
SCIP notification number (Bulgaria)	2dbd54d5-b6bb-411c-a5f1-54e61595d9d9
SCIP notification number (Czech Republic)	84dd446a-5f5d-4a21-b8df-86bc422914b6
SCIP notification number (Denmark)	7c57a703-0f2c-4785-a14f-c7fd77c15e2a
SCIP notification number (Finland)	1e399e65-6fef-44a3-9a77-08da7fb5860d
SCIP notification number (France)	89e31e3d-a160-4478-b73f-ee761007a790
SCIP notification number (Germany)	47fdc979-b432-4180-9903-5937560c0087
SCIP notification number (Hungary)	da39a442-04a9-4606-ae38-646e5bee3687
SCIP notification number (Italy)	db2e21e0-c647-4d0c-87b6-47b719ab36af
SCIP notification number (Netherlands)	fce609df-9815-4db9-a30a-ed98d53590dd

Continued on next page

Environmental Product Compliance

SCIP notification number (Poland)	9b23de87-801b-4b9b-a79a-510aa86fd61f
SCIP notification number (Romania)	9059facb-83c7-4026-9a74-aa44d23201e6
SCIP notification number (Sweden)	5a665f62-862b-4a14-8d06-ae3ed16d7821

Approvals / Certificates

General approvals

Approval	Standard	Certificate Name
UL Underwriters Laboratories Inc.	UL 2238	E519602

Downloads

Environmental Product Compliance

Compliance Search

Environmental Product Compliance
756-5402/050-020

Documentation

System Description

IP67 Cables and Plug-gable Connectors	pdf 157.80 KB	

Bid Text

756-5402/050-020	19.02.2019	xml 3.26 KB
756-5402/050-020	20.09.2017	doc 26.50 KB

CAD/CAE-Data

CAE data

WSCAD Universe
756-5402/050-020