Data Sheet | Item Number: 756-5403/050-020

Sensor/Actuator cable; M12A socket; angled; M12A plug; straight; 5-pole; Length: 2 m

https://www.wago.com/756-5403/050-020



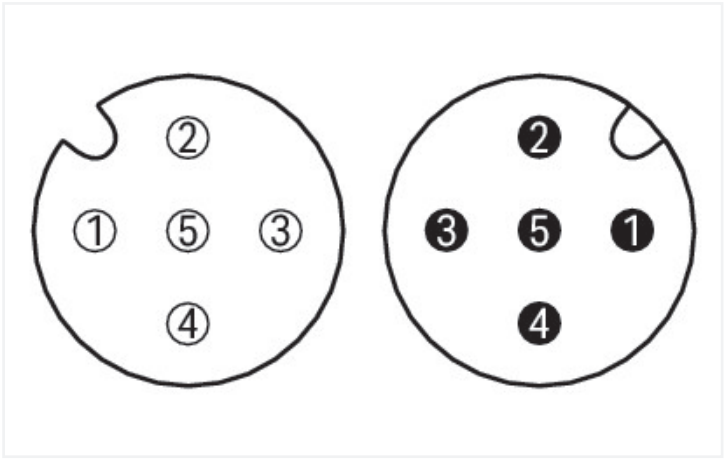

Similar to illustration

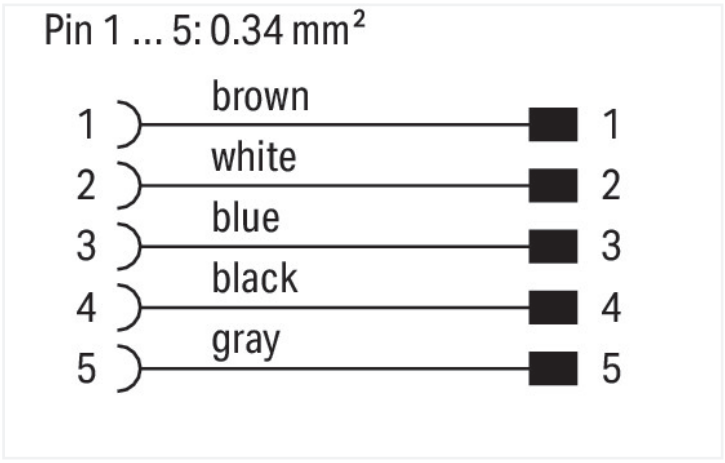

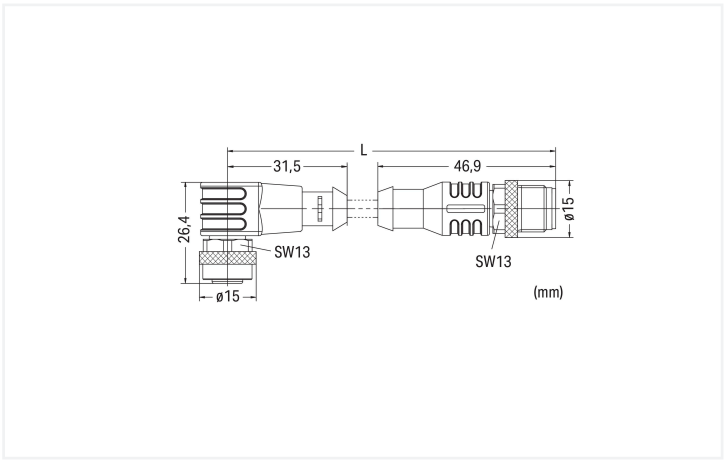

Dimensions in mm

Short description:

- PUR, halogen-free
- Suitable for drag chains
- High resistance to microbes, hydrolysis, oil, chemicals and UV radiation
- High chemical resistance
- Cable used: UL listed

Technical data

General information

Operating voltage	250 VAC/DC
Operating current	4 A
Rated impulse withstand voltage	1.5 kV
Insulation resistance	>10^9 Ω
Contact resistance	10 mΩ
Conductor resistance	≤ 60 Ω/km
Pollution degree	3 per VDE 0110
Protection type	IP67
Ambient (operating) temperature (static)	-50 … +90 °C

General information

Ambient (operating) temperature (dynamic)	-25 … +90 °C

Drag chain compatible

Bending radius	10 x cable diameter (min.)
Bending cycles	2 million
Acceleration (min.)	5 m/s²
Travel speed (max.)	3.33 m/s
Travel path (horizontal) max.	5 m
Travel path (vertical) max.	2 m
Torsional capacity	180 °/m

Cable

Cable length	2 m
Type code	LiF9YH-11YH or LiF9YC11YFHF
Conductor configuration	Bare copper wire, fine-stranded (42 x 0.1 mm)
Conductor insulation	PP9Y (halogen-free)
Sheath material	Polyurethane (PUR), halogen-free per DIN VDE 0472 Part 815, flame resistant per IEC 332-2, self-extinguishing
Sheathed cable color	black

Connector

Connection type	M12 Socket - M12 plug
Pole number	5
Cable connection direction to mating direction	90 °
Cable connection direction to mating direction (2)	0 °
Connector interface coding (cable/adapter) 1 1	A-coded
Connector interface coding (cable/adapter) 2 1	A-coded
Housing material	Polyurethane (PUR)
Contact material	CuSn
Tightening torque	1 Nm

Commercial data

PU (SPU)	10 (1) pcs
Packaging type	Box
Country of origin	HU
GTIN	4044918975667
Customs tariff number	85444290900

Product Classification

UNSPSC	26121609
eCl@ss 10.0	27-06-03-11
eCl@ss 9.0	27-06-03-11
ETIM 9.0	EC001855
ETIM 10.0	EC001855
ECCN	NO US CLASSIFICATION

Environmental Product Compliance

RoHS Compliance Status	Compliant,With Exemption
RoHS Exemption	6(c)
SCIP notification number (Austria)	7c530073-aaee-47ea-ae0f-244fb2952496
SCIP notification number (Belgium)	09216a84-c1b3-4376-a6dc-0158df9700e3
SCIP notification number (Bulgaria)	c5699b2b-70b1-4f3a-ab2b-a3fe69639a94
SCIP notification number (Czech Republic)	4b4c068d-a9ad-4e65-a5f0-609cb3f68883
SCIP notification number (Denmark)	76b27eed-490b-454b-a67a-c23839dc0d76
SCIP notification number (Finland)	a86172eb-02b1-457a-aa47-6a25b2f3b3c2
SCIP notification number (France)	d981848c-89ef-4212-a2d3-f1a70d15a9a9
SCIP notification number (Germany)	cef0dfe6-3c2a-4db1-8543-54b88df310ae
SCIP notification number (Hungary)	6e66f141-bcb1-4d22-8696-c6f99190c38f
SCIP notification number (Italy)	aea681cb-c3e4-4abb-b5a3-5c7bc527aaef
SCIP notification number (Netherlands)	9ae58480-e150-4784-8052-a1aa766582b9

Continued on next page

Environmental Product Compliance

SCIP notification number (Poland)	7917bf91-2760-4bec-a186-055fcdf80b08
SCIP notification number (Romania)	ce13f59d-2073-402d-880c-f6dd897a065a
SCIP notification number (Sweden)	73787a39-dafe-4330-bb67-3a856cb376fe

Approvals / Certificates

General approvals

Approval	Standard	Certificate Name
UL Underwriters Laboratories Inc.	UL 2238	E519602

Downloads

Environmental Product Compliance

Compliance Search

Environmental Product Compliance
756-5403/050-020

Documentation

System Description

IP67 Cables and Plug-gable Connectors	pdf 157.80 KB	

Bid Text

756-5403/050-020	19.02.2019	xml 3.25 KB
756-5403/050-020	20.09.2017	doc 26.50 KB

CAD/CAE-Data

CAE data

WSCAD Universe
756-5403/050-020