Data Sheet | Item Number: 756-5513/040-010

Sensor/Actuator cable; 2xM8 socket; straight; M12A plug; straight; 4-pole; Length: 1 m

https://www.wago.com/756-5513/040-010



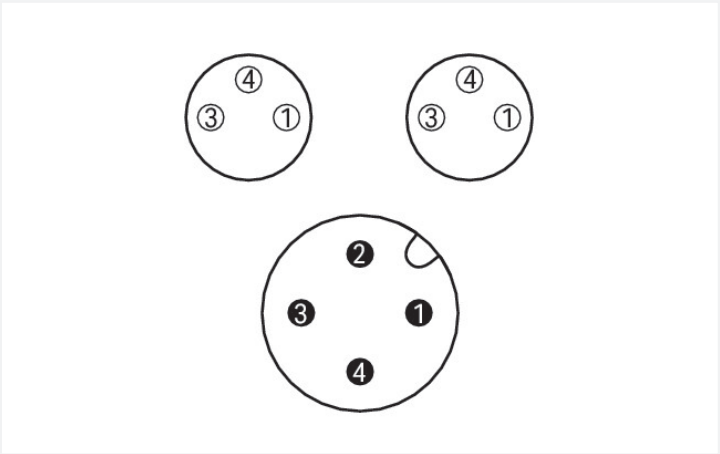

Similar to illustration

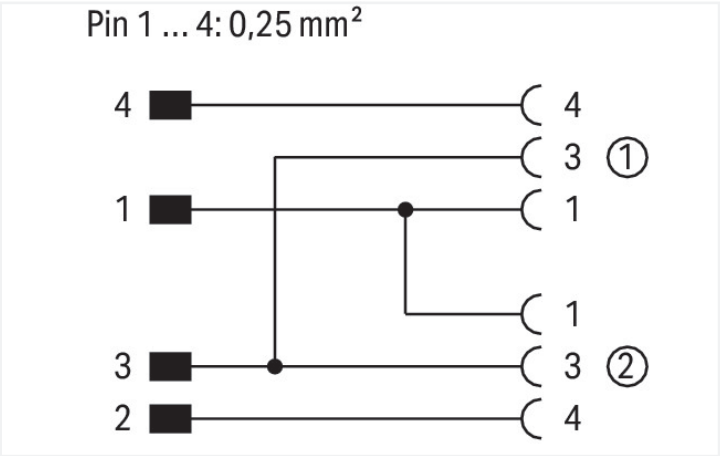

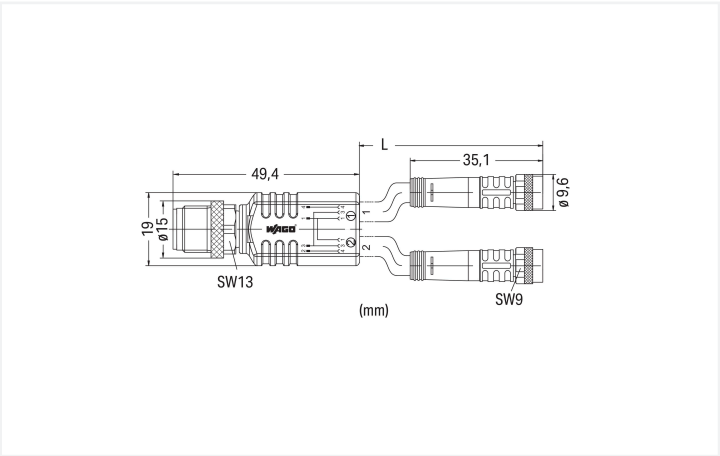

Dimensions in mm

Short description:

- PUR, halogen-free
- Suitable for drag chains
- High resistance to microbes, hydrolysis, oil, chemicals and UV radiation
- High chemical resistance
- Cable used: UL listed

Technical data

General information

Operating voltage	60 VAC/DC
Operating current	4 A
Rated impulse withstand voltage	1.5 kV
Insulation resistance	>10^9 Ω
Contact resistance	10 mΩ
Conductor resistance	≤ 60 Ω/km
Pollution degree	3 per VDE 0110
Protection type	IP67
Ambient (operating) temperature (static)	-50 … +90 °C

General information

Ambient (operating) temperature (dynamic)	-25 … +90 °C

Drag chain compatible

Bending radius	10 x cable diameter (min.)
Bending cycles	2 million
Acceleration (min.)	5 m/s²
Travel speed (max.)	3.33 m/s
Travel path (horizontal) max.	5 m
Travel path (vertical) max.	2 m
Torsional capacity	180 °/m

Cable

Cable length	1 m
Type code	LiF9YH-11YH or LiF9YC11YFHF
Conductor configuration	Bare copper wire, fine-stranded (42 x 0.1 mm)
Conductor insulation	PP9Y (halogen-free)
Sheath material	Polyurethane (PUR), halogen-free per DIN VDE 0472 Part 815, flame resistant per IEC 332-2, self-extinguishing
Sheathed cable color	black

Connector

Connection type	M8 socket; M8 socket - M12 plug
Pole number	4
Cable connection direction to mating direction	0 °
Cable connection direction to mating direction (2)	0 °
Connector interface coding (cable/adapter) 2 1	A-coded
Housing material	Polyurethane (PUR)
Contact material	CuSn
Tightening torque	0.6 … 1 Nm

Commercial data

PU (SPU)	10 (1) pcs
Packaging type	Box
Country of origin	DE
GTIN	4044918994811
Customs tariff number	85444290900

Product Classification

UNSPSC	26121604
eCl@ss 10.0	27-06-03-11
eCl@ss 9.0	27-06-03-11
ETIM 9.0	EC001855
ETIM 10.0	EC001855
ECCN	NO US CLASSIFICATION

Environmental Product Compliance

RoHS Compliance Status	Compliant,With Exemption
RoHS Exemption	6(c)
SCIP notification number (Austria)	ae6357af-53dc-4b13-a30a-64cb468fc959
SCIP notification number (Belgium)	a3b4aefd-0095-4ac0-8d73-729a7b2ca64d
SCIP notification number (Bulgaria)	b2445c5c-0797-4c24-a4f2-32254412ec5e
SCIP notification number (Czech Republic)	a49d3cc2-bf5c-4f5b-85c9-1d584053a7ef
SCIP notification number (Denmark)	a3a2acd6-1992-43b9-9c37-8dc8b26f1ecd
SCIP notification number (Finland)	42e2f6c2-b51c-4fca-b04c-ccdecc463e4d
SCIP notification number (France)	6b0eba94-1c05-49a0-a90a-a08bbcbdf1b9
SCIP notification number (Germany)	4593b8a9-7921-4394-b1c7-f6a620344611
SCIP notification number (Hungary)	f4e03ba1-3d9c-4271-9c2b-acc9e9d0b2f8
SCIP notification number (Italy)	2c0e96c2-8e18-4374-8360-70a020b56875
SCIP notification number (Netherlands)	aa5aa259-0d87-40f6-be6f-7caa78960a4c
SCIP notification number (Poland)	f47eec7a-fb3f-4697-825e-ac3349ae3f69
SCIP notification number (Romania)	861c692f-b14a-4839-b9d7-d7e2949158eb

Continued on next page

Environmental Product Compliance

SCIP notification number (Sweden)	aea346f4-0466-4875-b79d-e1479c0c434c

Downloads

Environmental Product Compliance

Compliance Search

Environmental Product Compliance 756-5513/040-010

Documentation

System Description

IP67 Cables and Plug-gable Connectors	pdf 157.80 KB	

Bid Text

756-5513/040-010	19.02.2019	xml 3.12 KB
756-5513/040-010	20.09.2017	doc 26.50 KB

CAD/CAE-Data

CAE data

WSCAD Universe 756-5513/040-010