Data Sheet | Item Number: 756-5516/040-010

Sensor/Actuator cable; 2xM12 socket; straight; M12A plug; straight; 4-pole; Length: 1 m

https://www.wago.com/756-5516/040-010



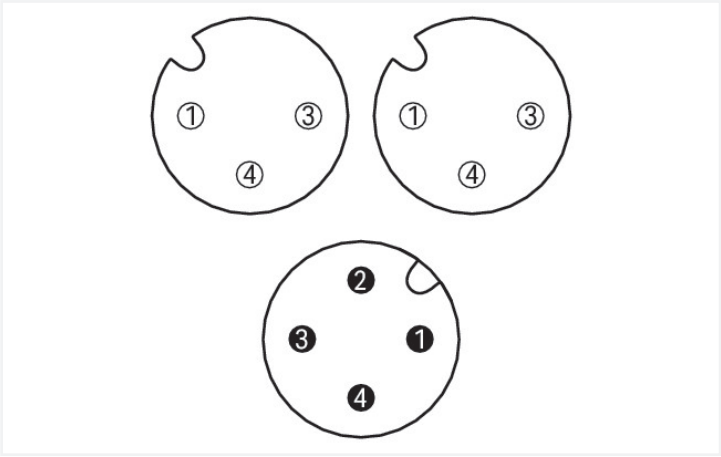

Similar to illustration

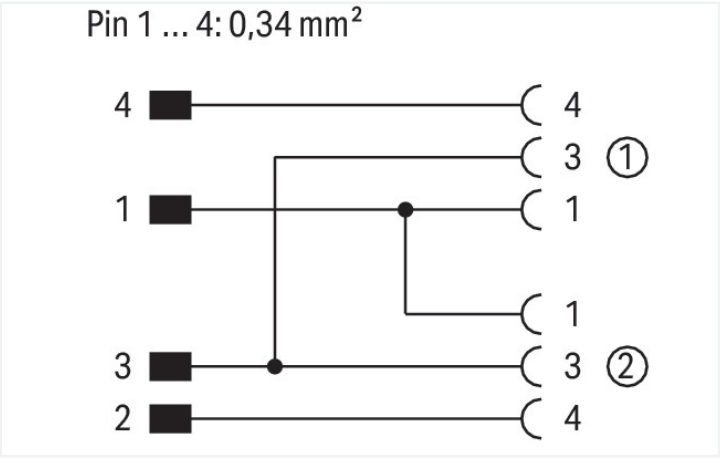

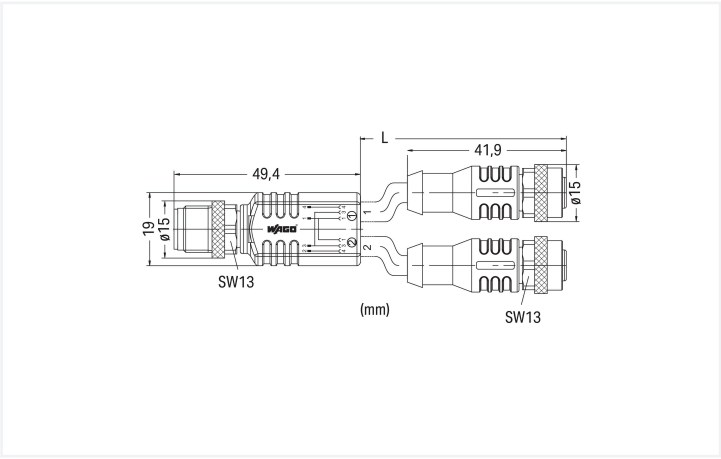

Dimensions in mm

Short description:

- PUR, halogen-free
- Suitable for drag chains
- High resistance to microbes, hydrolysis, oil, chemicals and UV radiation
- High chemical resistance
- Cable used: UL listed

Technical data

General information

Operating voltage	250 VAC/DC
Operating current	4 A
Rated impulse withstand voltage	2.5 kV
Insulation resistance	>10^9 Ω
Contact resistance	10 mΩ
Conductor resistance	≤ 60 Ω/km
Pollution degree	3 per VDE 0110
Protection type	IP67
Ambient (operating) temperature (static)	-50 … +90 °C

General information

Ambient (operating) temperature (dynamic)	-25 … +90 °C

Drag chain compatible

Bending radius	10 x cable diameter (min.)
Bending cycles	2 million
Acceleration (min.)	5 m/s²
Travel speed (max.)	3.33 m/s
Travel path (horizontal) max.	5 m
Travel path (vertical) max.	2 m
Torsional capacity	180 °/m

Cable

Cable length	1 m
Type code	LiF9YH-11YH or LiF9YC11YFHF
Conductor configuration	Bare copper wire, fine-stranded (42 x 0.1 mm)
Conductor insulation	PP9Y (halogen-free)
Sheath material	Polyurethane (PUR), halogen-free per DIN VDE 0472 Part 815, flame resistant per IEC 332-2, self-extinguishing
Sheathed cable color	black

Connector

Connection type	M12 Socket; M12 Socket - M12 plug
Pole number	4
Cable connection direction to mating direction	0 °
Cable connection direction to mating direction (2)	0 °
Connector interface coding (cable/adapter) 1 1	A-coded
Connector interface coding (cable/adapter) 1 2	A-coded
Connector interface coding (cable/adapter) 2 1	A-coded
Housing material	Polyurethane (PUR)
Contact material	CuSn
Tightening torque	1 Nm

Commercial data

PU (SPU)	1 pcs
Packaging type	Box
Country of origin	DE
GTIN	4044918994859
Customs tariff number	85444290900

Product Classification

UNSPSC	26121604
eCl@ss 10.0	27-06-03-11
eCl@ss 9.0	27-06-03-11
ETIM 9.0	EC001855
ETIM 10.0	EC001855
ECCN	NO US CLASSIFICATION

Environmental Product Compliance

RoHS Compliance Status	Compliant,No Exemption
SCIP notification number (Austria)	24bae0a4-e45a-4cd0-bd8b-6141f1be65ee
SCIP notification number (Belgium)	211d30ff-8997-459b-b512-c7d3b1ce735f
SCIP notification number (Bulgaria)	ebcaea10-e291-47fa-a8f8-835a9652308e
SCIP notification number (Czech Republic)	920621f8-520f-4893-aba3-bacfc85282e2
SCIP notification number (Denmark)	75fca941-77f4-41a2-9625-da11ca94b47a
SCIP notification number (Finland)	d2d2da97-9a53-4ee7-9bf2-1d452ed74fb2
SCIP notification number (France)	4da19154-a356-4f15-848d-582072ae3afb
SCIP notification number (Germany)	af4bfeee-2d9d-4b7a-8926-f648ad06ea75
SCIP notification number (Hungary)	61222768-71ae-4472-bdc0-3c067aae0045
SCIP notification number (Italy)	c743716b-307c-4ff9-868c-737942b87226
SCIP notification number (Netherlands)	a88acbc9-ffe1-4633-9543-5712d4029ead

Continued on next page

Environmental Product Compliance

SCIP notification number (Poland)	70823778-bb27-4fd9-b886-0d2475e7594a
SCIP notification number (Romania)	dfffc115-23d9-43ec-88c6-11268d79ec7c
SCIP notification number (Sweden)	a437e2cc-cbb2-42c8-b363-c3b8435b0b11

Downloads

Environmental Product Compliance

Compliance Search

Environmental Product Compliance 756-5516/040-010

Documentation

System Description

IP67 Cables and Plug-gable Connectors	pdf 157.80 KB	

Bid Text

756-5516/040-010	19.02.2019	xml 3.14 KB
756-5516/040-010	20.09.2017	doc 26.50 KB

CAD/CAE-Data

CAE data

WSCAD Universe 756-5516/040-010