Data Sheet | Item Number: 756-9202/040-000

Fitted pluggable connector; 4-pole; M12 plug, straight, A-coded; Spring

https://www.wago.com/756-9202/040-000





Similar to illustration

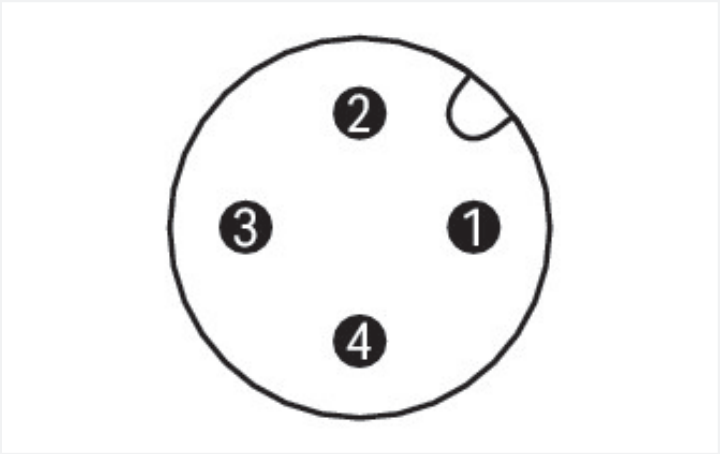

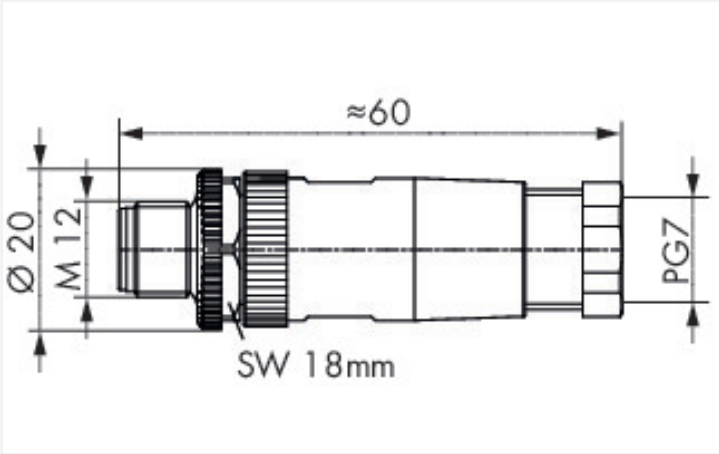

Dimensions in mm

Technical data	
Connection type	M12 plug
Pole number	4
Cable connection direction to mating direction	0 °
Connector interface coding (cable/adapter) 1 1	A-coded
Contact resistance	≤3 mΩ

Connection Data	
Connection type	Spring clamp technology
Solid conductor	0.14 … 0.5 mm² / 20 AWG

Mechanical data

Connectable sheathed cable diameter	4 … 6 mm
Housing material	PA
Contact material	CuZn
Contact Plating	Gold
Seal material	Sealing ring: neoprene
Mating cycles (max.)	100
Weight	24 g

Environmental requirements

Ambient temperature (operation)	-25 … +85 °C
Protection type	IP67
Note on protection type	in locked state
Pollution degree	3

Commercial data

PU (SPU)	10 pcs
Packaging type	Bag
Country of origin	DE
GTIN	4066966597011
Customs tariff number	85366990990

Product Classification

UNSPSC	39121413
eCl@ss 10.0	27-24-26-92
eCl@ss 9.0	27-24-26-92
ETIM 9.0	EC002584
ETIM 10.0	EC002584
ECCN	NO US CLASSIFICATION

Environmental Product Compliance

RoHS Compliance Status	Compliant,No Exemption
SCIP notification number (Austria)	99cedca6-7e6a-4ed6-bcdc-45c9efa95cd1
SCIP notification number (Belgium)	347fff70-21f7-4333-9dbe-a8843a1d509e
SCIP notification number (Bulgaria)	52acd581-87ea-4620-bdd6-79fe863005ff
SCIP notification number (Czech Republic)	5c04ba1a-65d0-490f-bc42-e1a4fce22082
SCIP notification number (Denmark)	503a8546-91d8-4af6-b2ae-5f4325a0eae4
SCIP notification number (Finland)	016de656-667c-4168-b8ba-721b302b50e2
SCIP notification number (France)	22ac824b-27ff-4626-9b2a-26eb063a72d0
SCIP notification number (Germany)	67dc9bda-f4b2-43cc-bb39-ff9ce14fed54
SCIP notification number (Hungary)	3fd9baaa-6555-4c99-9c4e-834d92d0aa28
SCIP notification number (Italy)	8a03b865-a8d4-4c1b-b2a4-727ad1a5b17a
SCIP notification number (Netherlands)	695242f9-d2fa-46a6-aee2-cc2a0ed59d80
SCIP notification number (Poland)	cb5bfe25-1b02-4f4a-aeed-bf15e5394a91
SCIP notification number (Romania)	f0c08267-82b4-4a73-a938-ae8fdac31b89
SCIP notification number (Sweden)	dbb466ca-ce00-41c9-8238-5bb9a196462e

Continued on next page

Downloads

Environmental Product Compliance

Compliance Search

Environmental Product Compliance
756-9202/040-000

Documentation

System Description

IP67 Cables and Plug-gable Connectors	pdf 157.80 KB	

Bid Text

756-9202/040-000	20.09.2017	doc 24.00 KB
756-9202/040-000	19.02.2019	xml 2.69 KB

CAD/CAE-Data

CAD data

2D/3D Models
756-9202/040-000

CAE data

WSCAD Universe
756-9202/040-000