Data Sheet | Item Number: 756-9301/050-000

Accessories; 5-pole

https://www.wago.com/756-9301/050-000







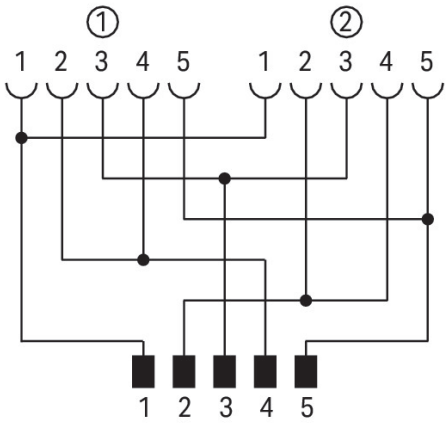

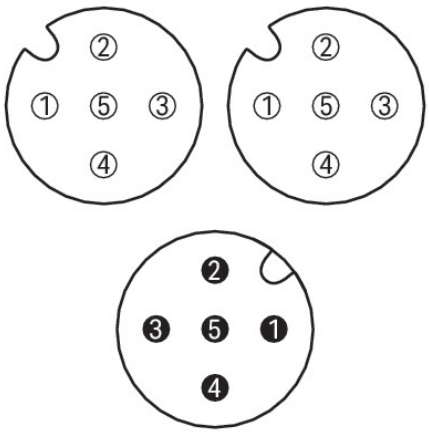

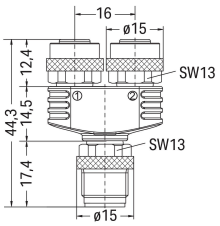

Dimensions in mm

Technical data

General information

Insulation resistance	10^9 Ω
Pollution degree	3
Protection type	IP67
Note on protection type	in fully locked position

Other properties

Note	M12/M12 distribution connectors must only be used in combination with pre-assembled cables!

Connector

Connection type	M12 Socket; M12 Socket - M12 plug
Pole number	5
Connector interface coding (cable/adapter) 1 1	A-coded
Connector interface coding (cable/adapter) 1 2	A-coded
Connector interface coding (cable/adapter) 2 1	A-coded

Commercial data

PU (SPU)	1 pcs
Packaging type	Box
Country of origin	DE
GTIN	4045454835637
Customs tariff number	85366990990

Product Classification

UNSPSC	39121402
eCl@ss 10.0	27-24-26-92
eCl@ss 9.0	27-24-26-92
ETIM 9.0	EC002584
ETIM 10.0	EC002584
ECCN	NO US CLASSIFICATION

Environmental Product Compliance

RoHS Compliance Status	Compliant,No Exemption

Downloads

Environmental Product Compliance

Compliance Search

Environmental Product Compliance 756-9301/050-000

Continued on next page

Documentation

System Description

IP67 Cables and Plug-gable Connectors	pdf 157.80 KB	

Bid Text

756-9301/050-000	19.02.2019	xml 2.59 KB
756-9301/050-000	20.09.2017	doc 24.00 KB

CAD/CAE-Data

CAE data

WSCAD Universe 756-9301/050-000	