Data Sheet | Item Number: 756-9403/060-000

Accessories; M12 plug, right angle; 5-pole

https://www.wago.com/756-9403/060-000





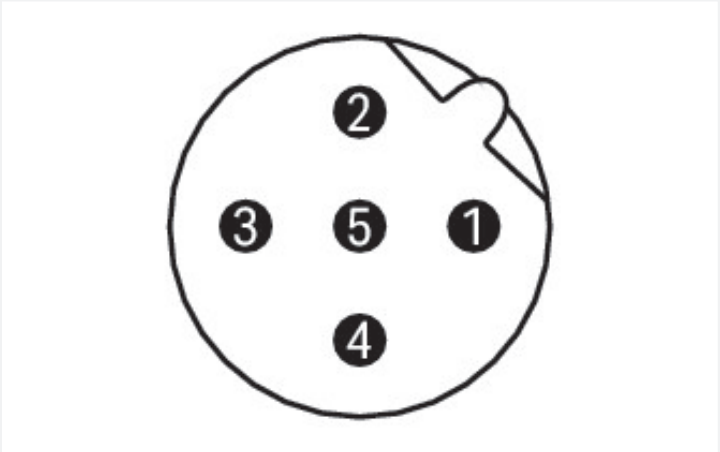

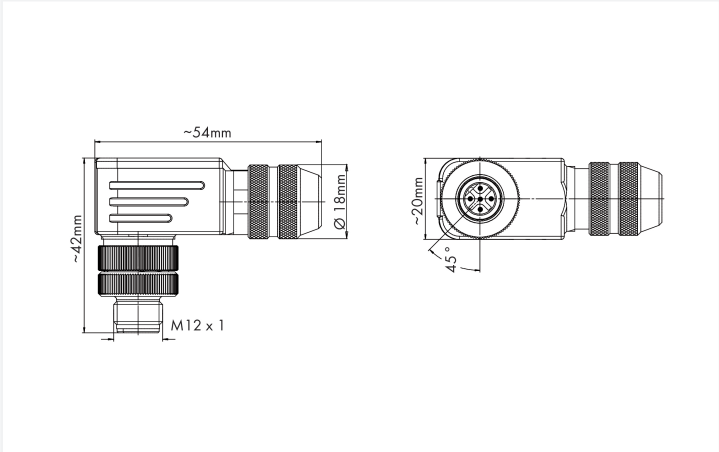

Dimensions in mm

Technical data	
Connection type	M12 plug
Pole number	5
Connection point (shielded)	Yes
Cable connection direction to mating direction	90 °
Connector interface coding (cable/adapter) 1 1	B-coded
Contact resistance	≤3 mΩ

Connection Data	
Connection type	Spring clamp technology
Solid conductor	0.14 … 0.5 mm² / 20 AWG

Mechanical data

Connectable sheathed cable diameter	6 … 8 mm
Housing material	Die-cast zinc, nickel-plated
Contact material	CuZn
Contact Plating	Gold
Seal material	Sealing ring: neoprene; O-ring: Viton
Mating cycles (max.)	100
Weight	65.6 g

Environmental requirements

Ambient temperature (operation)	-40 … +85 °C
Protection type	IP67
Note on protection type	in locked state
Pollution degree	3

Commercial data

PU (SPU)	10 pcs
Packaging type	Bag
Country of origin	DE
GTIN	4066966597707
Customs tariff number	85366990990

Product Classification

UNSPSC	39121413
eCl@ss 10.0	27-24-26-92
eCl@ss 9.0	27-24-26-92
ETIM 9.0	EC002584
ETIM 10.0	EC002584
ECCN	NO US CLASSIFICATION

Environmental Product Compliance

RoHS Compliance Status	Compliant,No Exemption
SCIP notification number (Austria)	c41259f7-0d8d-49d1-bcfb-8bae25094c1d
SCIP notification number (Belgium)	5769a8eb-6bc6-43ed-b720-0c2053a94a4f
SCIP notification number (Bulgaria)	3907bf19-2f8d-44f1-868d-25282508a936
SCIP notification number (Czech Republic)	7df74167-2aa8-4787-9556-0a6cc65290c7
SCIP notification number (Denmark)	74e82189-6a29-40a5-ae8f-2a8fb1386a09
SCIP notification number (Finland)	2092b965-df4f-4852-a419-808e0c906ed1
SCIP notification number (France)	a5a78c25-57d5-4692-89be-66d525cd281e
SCIP notification number (Germany)	65efa2c7-2900-47ef-8e3c-82033fdae91d
SCIP notification number (Hungary)	e640518a-8f78-4680-9b57-a0a04042a513
SCIP notification number (Italy)	729f861f-4595-419e-8694-eb37ccd26bfc
SCIP notification number (Netherlands)	995b7c7d-d96e-403e-83cc-0194fed3b189
SCIP notification number (Poland)	b1a7ac9c-1af2-4313-9819-8006bafe2d20
SCIP notification number (Romania)	6cc1a58a-7ede-4502-8474-43eee1f2ffa0
SCIP notification number (Sweden)	a067149f-4b87-4df1-a4ac-d2037132463a

Continued on next page

Downloads

Environmental Product Compliance

Compliance Search

Environmental Product Compliance 756-9403/060-000

CAD/CAE-Data

CAE data

WSCAD Universe 756-9403/060-000