Data Sheet | Item Number: 756-9405/060-000

Accessories; M12 plug, axial; 5-pole

https://www.wago.com/756-9405/060-000



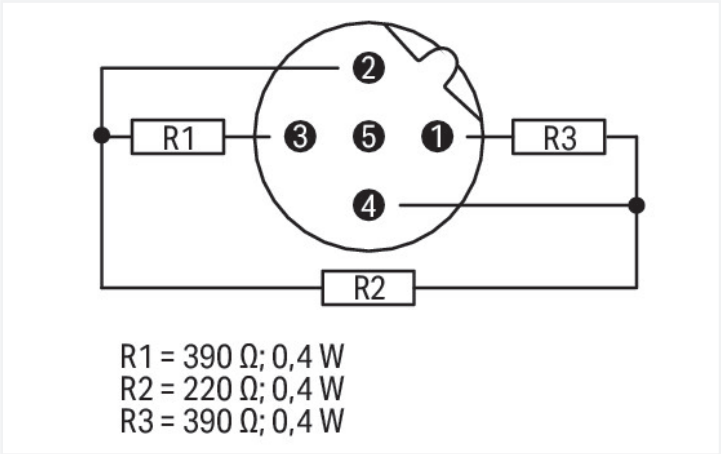

Similar to illustration

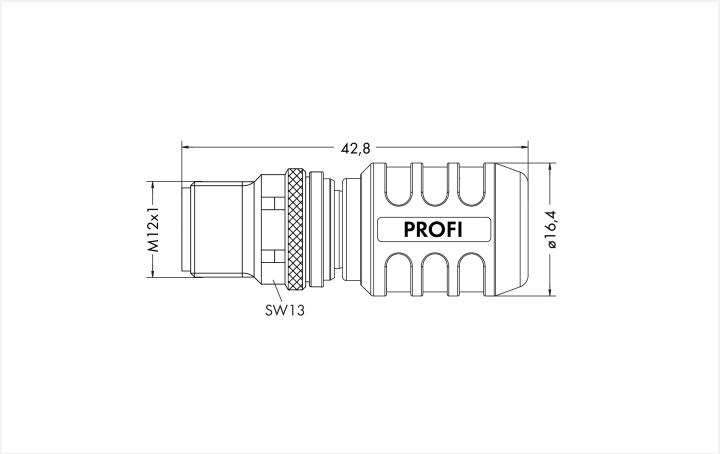

Dimensions in mm

Technical data	
Connection type	M12 plug
Pole number	5
Connector interface coding (cable/adapter) 1 1	B-coded
Communication/fieldbus	PROFIBUS

Mechanical data	
Weight	17.9 g

Environmental requirements

Protection type	IP67

Commercial data

PU (SPU)	1 pcs
Packaging type	Box
Country of origin	DE
GTIN	4045454639914
Customs tariff number	85366990990

Product Classification

UNSPSC	39121402
eCl@ss 10.0	27-24-26-92
eCl@ss 9.0	27-24-26-92
ETIM 9.0	EC002584
ETIM 10.0	EC002584
ECCN	NO US CLASSIFICATION

Environmental Product Compliance

RoHS Compliance Status	Compliant,No Exemption

Downloads

Environmental Product Compliance

Compliance Search

Environmental Product Compliance 756-9405/060-000

CAD/CAE-Data

CAE data

WSCAD Universe 756-9405/060-000