

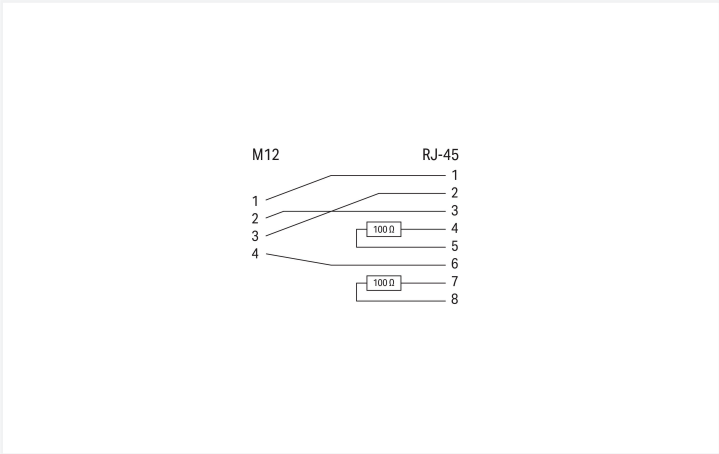

Similar to illustration

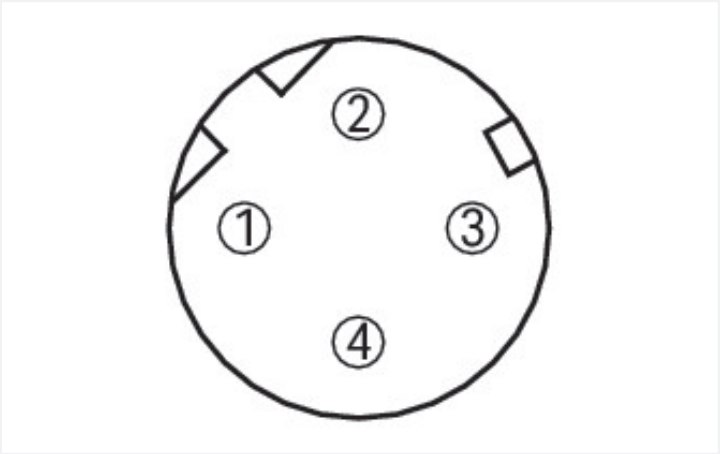

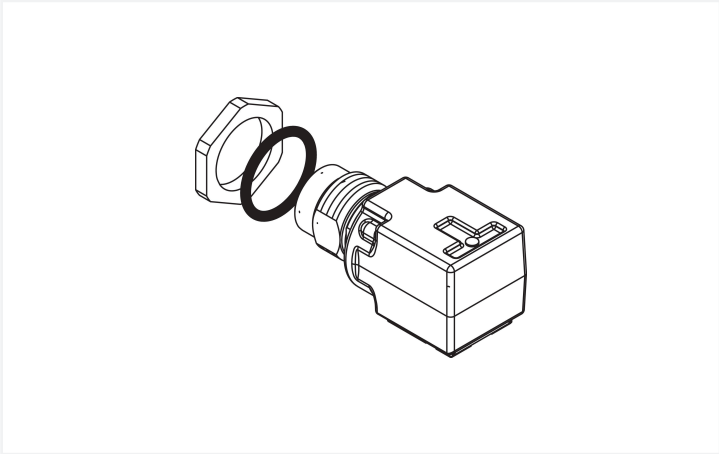

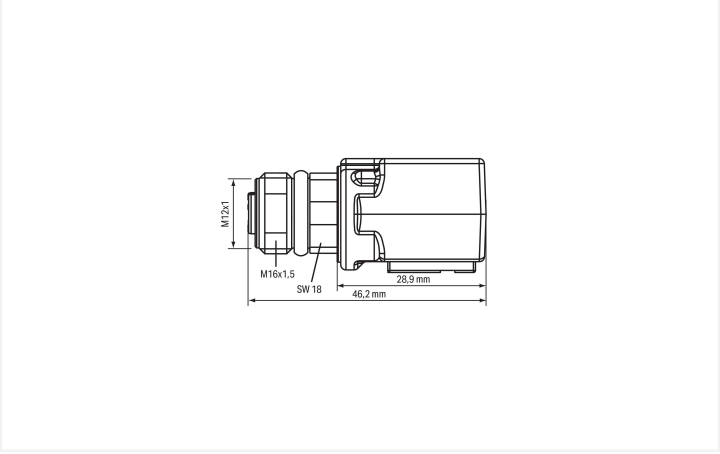

Dimensions in mm

Technical data

Connection type	M12 Socket - RJ-45 socket
Pole number	4
Cable connection direction to mating direction	0 °
Cable connection direction to mating direction (2)	90 °
Connector interface coding (cable/adapter) 1 1	D-coded
Communication/fieldbus	ETHERNET
Communication/fieldbus (2)	PROFINET

Mechanical data

Weight	37.5 g

Environmental requirements

Protection type	IP67

Commercial data

PU (SPU)	1 pcs
Packaging type	Box
Country of origin	DE
GTIN	4045454521912
Customs tariff number	85366990990

Product Classification

UNSPSC	39121421
eCl@ss 10.0	27-24-26-92
eCl@ss 9.0	27-24-26-92
ETIM 9.0	EC002584
ETIM 10.0	EC002584
ECCN	NO US CLASSIFICATION

Environmental Product Compliance

RoHS Compliance Status	Compliant,No Exemption

Downloads

Environmental Product Compliance

Compliance Search

Environmental Product Compliance 756-9503/040-000

Continued on next page

CAD/CAE-Data

CAE data
WSCAD Universe 756-9503/040-000