Data Sheet | Item Number: 757-403/000-005

M8 sensor/actuator box; 10-way; 3-pole; 5 m

https://www.wago.com/757-403/000-005



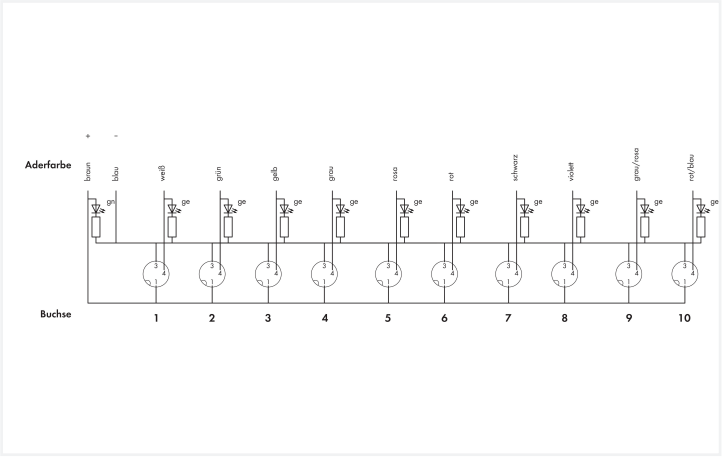

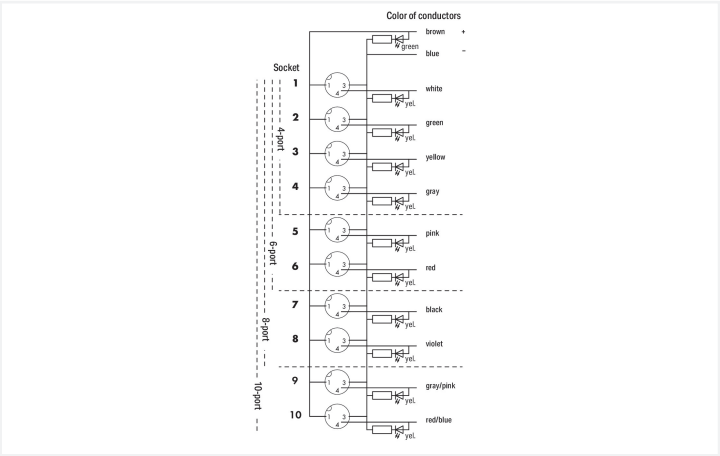

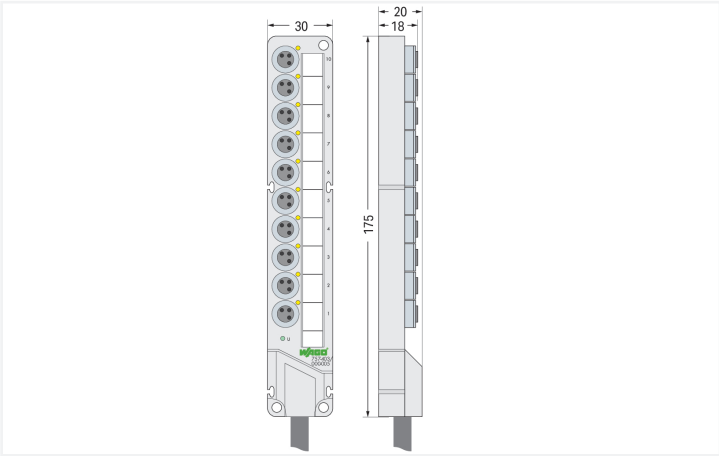

- M8 sensor/actuator box, 10-way
- 3-pole (1 signal per contact)
- Cable length: 5 and 10 m
- Green LED operating indicator
- Yellow LED status indicator
- incl. marking strips (WMB markers can also be used)
- incl. M8 protective caps (2 pcs)

Technical data

Contact resistance (max.)	0.01 Ω
Supply voltage	10 … 30 VDC; Rated voltage: 32 V ~ rms
Current carrying capacity (signal connections)	2 A
Current carrying capacity (supply connections)	6 A
Rated value of electrical isolation	500 V
Functionally separated potential groups	Kontakt/Kontakt
Insulation resistance	>10^9 Ω
Signal characteristics	PNP
Indicators	LED yellow: Signal status (1 x per contact); LED (U) green: Sensor/actuator box status

Connection Data

Connection technology: I/O	10 x M8 socket; 3-pole
Connection technology: trunk cable	1 x Fixed connecting cable
Length of connection cable	5 m
Strip length	100 mm / 3.94 inches
Wire colors	white, green, yellow, gray, pink, red, black, purple, gray/pink, red/blue, brown, blue
Cable design	Wire cross-section: 0.34 mm²; Wire cross-section: 0.75 mm²

Physical data

Width	30 mm / 1.181 inches
Height	20 mm / 0.787 inches
Depth	175 mm / 6.89 inches

Mechanical data

Mounting type	Screw mount
Weight	570 g

Material data

Housing material	PA 66 (UL 94 V0); RAL 7035; silicon and halogen free
Halogen-free	Yes
Sheathed cable diameter	7.6 mm
Bending radius	10 x cable diameter (min.) for flexible application
Material properties of the connections	Contact: CuSn, nickel base-coat plating and 0.8 µm gold-plated; Threaded bush: die-cast Zn, nickel-plated; Seal: Viton; 50 mating cycles
Sheath material	PUR
Sheathed cable color	black
Encapsulation	Fully encapsulated with conformal coating (UL 94 V0)

Environmental requirements

Ambient temperature (operation)	-25 … +80 °C
Ambient (operating) temperature (dynamic)	-5 … +80 °C
Ambient (operating) temperature (static)	-40 … +90 °C
Protection type	IP68
Note on protection type	72 hours at a depth of 1 meter underwater per EN 60529 in the fully locked position with its plugs or protective caps
Pollution degree	3 per VDE 0110
Vibration resistance	Per IEC 60068-2-6
Shock resistance	per IEC 60068-2-27

Commercial data

PU (SPU)	1 pcs
Packaging type	Box
Country of origin	DE
GTIN	4044918978651
Customs tariff number	85366990990

Continued on next page

Product Classification

UNSPSC	39121421
eCl@ss 10.0	27-44-01-08
eCl@ss 9.0	27-44-01-08
ETIM 9.0	EC002585
ETIM 10.0	EC002585
ECCN	NO US CLASSIFICATION

Environmental Product Compliance

RoHS Compliance Status	Compliant,With Exemption
RoHS Exemption	6(c)
SCIP notification number (Austria)	d927068f-0862-4876-bec4-3c5747f060cb
SCIP notification number (Belgium)	8ea47484-2b2e-4a37-a20a-43c520893a38
SCIP notification number (Bulgaria)	862a34f9-8614-4704-85be-5866511be648
SCIP notification number (Czech Republic)	71f02abb-c4a3-4678-8ad0-a88b1b0549a8
SCIP notification number (Denmark)	a19b16f0-f6bc-498a-bfb9-0a1225e0b9af
SCIP notification number (Finland)	1bd8e7f4-d8a8-49db-a71e-66f89201bbdf
SCIP notification number (France)	b3511dcf-5209-47de-a242-4a722570ac8a
SCIP notification number (Germany)	d27d00cd-1807-4d66-8f9a-0bdb895578d2
SCIP notification number (Hungary)	fcba20ea-a23b-422a-85dc-eec7e447bbc9
SCIP notification number (Italy)	080061f7-2495-4c7c-b917-4ae6e9d5c975
SCIP notification number (Netherlands)	ac40203c-b420-4792-85b2-b4ba220b551e
SCIP notification number (Poland)	6917cd9b-ee06-4c69-86b5-dc78cf7495ee
SCIP notification number (Romania)	7e6a17cd-1074-49f0-8ec8-66780d57bca0
SCIP notification number (Sweden)	465cfbf6-c495-41bb-8079-8e2668fca334

Approvals / Certificates

General approvals

Approval	Standard	Certificate Name
UL UL International Germany GmbH (ORDINARY LOCATIONS)	UL 508	E175199 Sec.5

Downloads

Environmental Product Compliance

Compliance Search

Environmental Product Compliance
757-403/000-005

Continued on next page

Documentation

System Description

Sensor/Actuator Boxes – General Product Information	pdf 428.34 KB	⬇

CAD/CAE-Data

CAD data

2D/3D Models 757-403/000-005	⬇

CAE data

EPLAN Data Portal 757-403/000-005	⬇
WSCAD Universe 757-403/000-005	⬇
ZUKEN Portal 757-403/000-005	⬇

1 Compatible Products

1.1 Optional Accessories

1.1.1 Cover

1.1.1.1 Cover



Item No.: 756-8101
M8 protective cap; for unused sockets

1.1.2 Installation

1.1.2.1 Intermediate plate



Item No.: 757-000
Spacer module for sensor/actuator box; 10-way

1.1.3 Marking

1.1.3.1 Marking device



Item No.: 210-110
Fiber-tip pen

Continued on next page

1.1.3.2 Marking strip



Item No.: 757-001
Marking strips; not stretchable; snap-on type