Data Sheet | Item Number: 758-879/000-000

Memory Card CF; SLC-NAND

https://www.wago.com/758-879/000-000



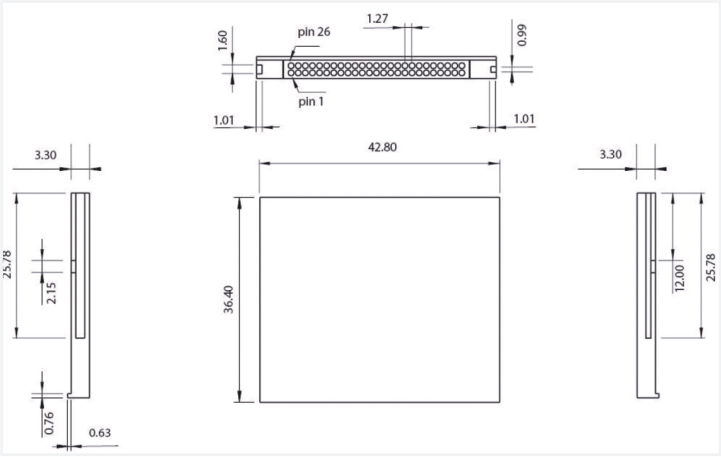

Dimensions in mm

The CF memory card replaces standard storage media and is used to store customer data and boot projects, or to transport this data between devices. Thanks to its extended temperature range, the memory card can also be used in applications up to 60°C. This memory card is compatible to the CF standard, enabling it to be used in any data processing system equipped with a CF slot.

The industrial memory card has the following system features:

- Storage capacity: 1 GB
- Compatible to the CompactFlash® Specification, Version 3.0
- In line with the PC Card standard
- Supports TRUE IDE Mode, ATA Standard
- Three access modes:
-
- PC Card memory mode
- PC Card I/O mode
- TRUE IDE mode
- Error correction function: 4 bits / 512 bytes
- Supports auto-standby and idle status
- Supports multiword and ultra-direct memory access, multisector transfer and logical block addressing

Technical data

Internal memory (flash)	1000 MB
Write/read cycles (max.)	Single: 20 Mbytes/s (max.) / 10 Mbytes/s (max.) Dual: 40 Mbytes/s (max.) / 20 Mbytes/s (max.)
MTBF	300,000 h
Service life	2,000,000 program/operating cycles

Physical data

Width	42.8 mm
Height	36.4 mm
Depth	3.3 mm

Material data

Weight	11 g

Environmental requirements

Ambient temperature (operation)	-40 … +85 °C
Ambient temperature (storage)	-55 … +95 °C
Relative humidity (without condensation)	95 %
Vibration resistance	Per IEC 60068-2-6
Shock resistance	per IEC 60068-2-27

Commercial data

PU (SPU)	1 pcs
Packaging type	Box
Country of origin	TW
GTIN	4050821045052
Customs tariff number	85235200009

Product Classification

UNSPSC	43202005
eCl@ss 10.0	19-15-07-02
eCl@ss 9.0	19-15-07-02
ETIM 9.0	EC001068
ETIM 10.0	EC001068
ECCN	NO US CLASSIFICATION

Environmental Product Compliance

RoHS Compliance Status	Compliant,No Exemption

Downloads

Environmental Product Compliance

Compliance Search

Environmental Product Compliance 758-879/000-000

Documentation

Bid Text

758-879/000-000	27.11.2018	docx 13.56 KB	
758-879/000-000	19.02.2019	xml 3.26 KB	

Continued on next page

CAD/CAE-Data

CAE data
WSCAD Universe 758-879/000-000