Data Sheet | Item Number: 770-733

Snap-in plug; 3-pole; Cod. A; white

https://www.wago.com/770-733





Color: white



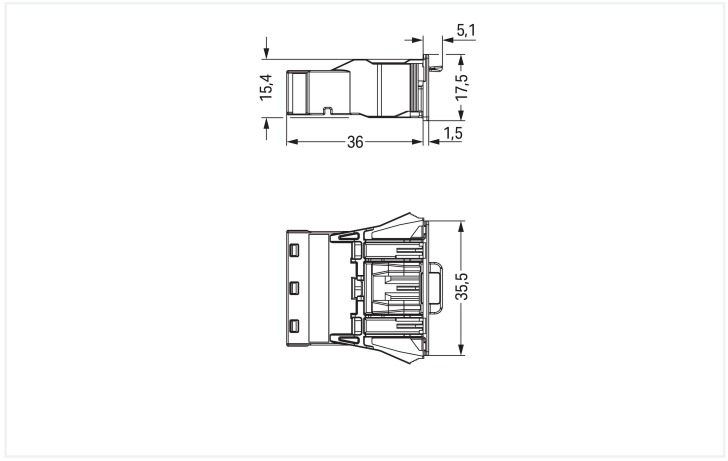

Dimensions in mm

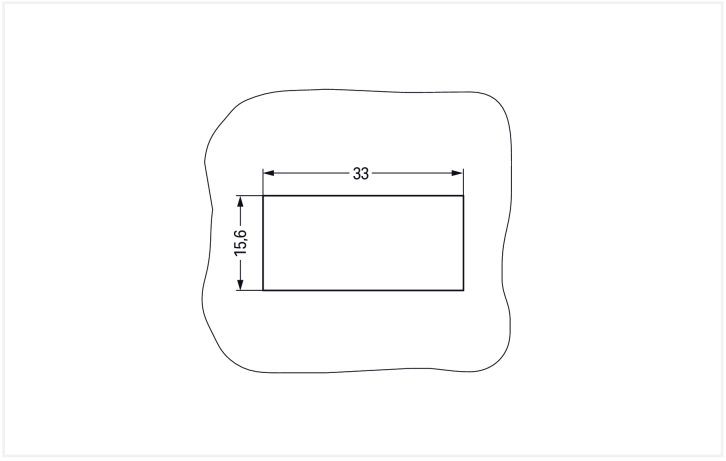

Dimensions in mm
Plate thickness: 0.5 … 2 mmCutout tolerance: + 0.1 mm Please note!

Male connector/plug *WINSTA*® MIDI with protection against mismating

Use effective pluggable connections instead of laborious screw connections: With the *WINSTA*® MIDI male connector/plug A coding. WAGO pluggable installation connectors can be used when requirements repeat or are distributed on a defined pattern, for example for installing grid lighting or flush-mount lighting. The

mechanical coding and color coding of the pluggable installation connector ensure error-free installation of the individual components – including protection against mismating. The pluggable installation connector is protected against ingress by solid objects in accordance with protection type IP20 (When mated: IP2xC (These compact connectors are not designed for use in open, easily accessible areas!)). Standard mains applications for almost any domain of use can be implemented with *WINSTA*® MIDI pluggable installation connectors with A coding. This pluggable installation connector can be used for electrical currents up to 25 A. Thus the product is especially suitable for high power loads. Our *WINSTA*® MIDI product line allows flexibility for the electrical installation. With its Push-in CAGE CLAMP® spring pressure connection technology, it ensures error-free, time-saving installation and offers flexibility and customization for meeting various installation requirements.

Push-in CAGE CLAMP® spring pressure connection technology – pluggable installation instead of laborious screw connections!

The WINSTA® Pluggable Connection System allows pluggable electrical installation. This significantly reduces the need for servicing and lowers costs. Now you can also reduce installation costs without compromising safety and quality: with marking eliminates the need for servicing and prevents unnecessary downtime.

- effective protection against mismating
- simple circuits
- with A coding for a great number of applications
- ready to install and use immediately
- quick replacement of defective units during ongoing operation

Notes

General safety information	1. Only to be used by a qualified electrician or by a person electrically instructed for the task (EIP per DIN VDE 0105-100). 2. Do not install while energized or under load. 3. Use only for its intended purpose. 4. Observe applicable national regulations, standards and directives. 5. Observe the technical specifications of the products. 6. Ensure correct polarity assignment. 7. Do not use damaged or contaminated components. 8. Observe conductor types, conductor cross-sections, strip lengths and cable diameters. 9. Insert conductors up to the stop. 10. Use only with locking lever and strain relief. 11. Use original accessories only. **To be sold only with installation instructions!**
Note	The snap-in connectors must be relieved of tensile and transverse forces. A surface finish can influence the edge radius of the cutouts. This may affect the snap-in socket fit, so ensure an adequate fit before use. In addition, the punched edge should be on the inside for punched cutouts. The wings of the snap-in connectors must not be mechanically stressed for a long period before use (e.g., due to a pre-locking position).

Electrical data

Ratings per	IEC/EN 60664-1		
Overvoltage category	III	III	II
Pollution degree	3	2	2
Nominal voltage	250 V	-	-
Rated impulse withstand voltage	4 kV	-	-
Rated current	25 A	-	-

Approvals per	UL 1977
Rated voltage	600 V
Rated current	23 A

General information

Note on contact resistance	approx. 1 mΩ of contact resistance approx. 0.25 mΩ contact transition plug/socket

Connection Data

Clamping units	6
Total number of potentials	3
PE function	Preceding PE contact

Connection 1

Connection technology	Push-in CAGE CLAMP®
Actuation type	Operating tool Push-in
Nominal cross-section	4 mm² / 12 AWG
Solid conductor	0.5 … 4 mm² / 20 … 12 AWG
Solid conductor; push-in termination	1.5 … 4 mm² / 16 … 12 AWG

Continued on next page

Connection 1

Stranded conductor	0.5 … 2.5 mm² / 20 … 14 AWG
Fine-stranded conductor	0.5 … 4 mm² / 20 … 12 AWG
Fine-stranded conductor; with insulated ferrule	0.25 … 1.5 mm² / 20 … 16 AWG
Fine-stranded conductor; with uninsulated ferrule	0.25 … 2.5 mm² / 20 … 14 AWG
Fine-stranded conductor; with ferrule; push-in termination	1.5 mm² / 16 AWG
Strip length	9 mm / 0.35 inches
Pole number	3
Conductor entry direction to mating direction	0 °
Coding	A

Physical data

Pin spacing	10 mm / 0.394 inches
Width	35.5 mm / 1.398 inches
Height	17.5 mm / 0.689 inches
Depth	41.1 mm / 1.618 inches

Mechanical data

Use	General mains applications
Variable coding	Yes
Marking	N ⏚ L
Potential marking	N ⏚ L
Mating force of a plug-in connection	approx. 20 … 70 N (depending on pole number)
Retention force of a plug-in connection	Locked: > 80 N
Unmating force of a plug-in connection	Unlocked: approx. 20 … 70 N (depending on pole number)
Number of mating cycles	200, without resistive load
Housing sheet thickness	0.5 … 2 mm / 0.02 … 0.079 inches
Mounting type	Snap-in flange
Protection type	IP20; When mated: IP2xC (These compact connectors are not designed for use in open, easily accessible areas!)
Suitable for through-panel applications	Yes

Plug-in connection

Contact type (pluggable connector)	Male connector/plug
Connector (connection type)	for conductor
Mismating protection	Yes
Note on mismating protection	All *WINSTA*® components are 100% protected against mismating when: a.) plugging different numbers of poles b.) plugging while rotated 180 c.) plugging while laterally staggered d.) plugging one pole
Locking lever	Yes
Locking of plug-in connection	Locking lever
Note on locking system	All connectors for mounted installations (snap-in versions for lighting fixtures or devices, all types of PCB and distribution connectors) are factory-equipped with locking levers to ensure plugs and sockets are securely locked. Additional locking levers are only required for flying leads (plug/socket).

Continued on next page

Material data

Note (material data)	Information on material specifications can be found here
Color	white
Insulation material (main housing)	Polyamide (PA66)
Flammability class per UL94	V0
Clamping spring material	Chrome-nickel spring steel (CrNi)
Contact material	Copper or copper alloy; surface-treated
Contact Plating	Tin
Fire load	0.238 MJ
Weight	12.2 g

Environmental requirements

Processing temperature	-5 … +40 °C
Continuous operating temperature	-35 … +85 °C
Note on continuous operating temperature	Insulating parts for temperatures ≤ 105 °C

Commercial data

Product Group	20 (Winsta)
PU (SPU)	100 pcs
Packaging type	Box
Country of origin	PL
GTIN	4044918254229
Customs tariff number	85366990990

Product Classification

UNSPSC	39121402
eCl@ss 10.0	27-44-06-02
eCl@ss 9.0	27-44-06-02
ETIM 9.0	EC002566
ETIM 10.0	EC002566
ECCN	NO US CLASSIFICATION

Environmental Product Compliance

RoHS Compliance Status	Compliant,No Exemption

Approvals / Certificates

General approvals

Approval	Standard	Certificate Name
CCA DEKRA Certification B.V.	EN 61535	71-123228
CCA DEKRA Certification B.V.	IEC 61535	NL -84761
cURus Underwriters Laboratories Inc.	UL 1977	E45171
cURus Underwriters Laboratories Inc.	UL 1059	E 45172

Declarations of conformity and manufacturer's declarations

Approval	Standard	Certificate Name
EU-Declaration of Conformity WAGO GmbH & Co. KG	-	-

Continued on next page

Approvals for marine applications

Approval	Standard	Certificate Name
ABS American Bureau of Shipping	-	24-0095977-PDA
DNV GL Det Norske Veritas, Germanischer Lloyd	-	TAE00001Z6
LR Lloyds Register	IEC 61984	LR22429487TA

Downloads

Environmental Product Compliance

Compliance Search

Environmental Product Compliance 770-733

Documentation

Bid Text

770-733	19.02.2019	xml 2.89 KB
770-733	08.06.2015	doc 23.00 KB

CAD/CAE-Data

CAD data

2D/3D Models 770-733

CAE data

EPLAN Data Portal 770-733

WSCAD Universe 770-733

ZUKEN Portal 770-733

Continued on next page

1 Compatible Products

1.1 System counterpart

1.1.1 Cable assembly

Item No.: 771-9993/106-102
pre-assembled connecting cable; Eca; Socket/open-ended; 3-pole; Cod. A; H05VV-F 3G 1.5 mm²; 1 m; 1,50 mm²; white

Item No.: 771-9993/006-102
pre-assembled interconnecting cable; Eca; Socket/plug; 3-pole; Cod. A; H05VV-F 3G 1.5 mm²; 1 m; 1,50 mm²; white

1.1.2 Female connector/socket



Item No.: 770-223
Socket; 3-pole; Cod. A; white



Item No.: 770-123
Socket; with strain relief housing; 3-pole; Cod. A; 4,00 mm²; white



Item No.: 770-223/035-050
Socket; with strain relief housing; 3-pole; Cod. A; 4,00 mm²; white

1.2 Optional Accessories

1.2.1 Coding

1.2.1.1 Coding

Item No.: 770-401
Coding pin; for plugs; Plastic; gray

1.2.2 Cover

1.2.2.1 Cover



Item No.: 770-643
Lockout cap; 3-pole; for cutouts; Plastic; black



Item No.: 770-693
Lockout cap; 3-pole; for cutouts; Plastic; white



Item No.: 770-360
Lockout cap; for plugs; 5-pole; separable; yellow

1.2.3 Tool

1.2.3.1 Operating tool



Item No.: 770-383
Operating tool; 3-way; green



Item No.: 210-719
Operating tool; Blade: 2.5 x 0.4 mm; with a partially insulated shaft

Continued on next page

Installation Notes

Conductor termination

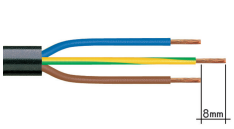

1. Strip length, outer insulation = 35 mm (2-pole), 55 mm (3- to 5-pole)
2. Strip length = 9 mm
3. Extended ground conductor = 8 mm

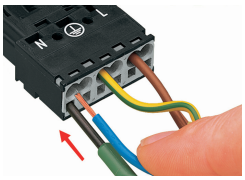

To terminate fine-stranded conductors, open the clamping unit via screwdriver (2.5 mm blade width) and insert a stripped conductor until it hits the backstop.

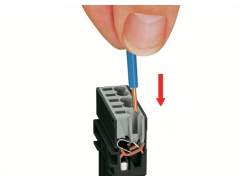

Insert the stripped solid conductor until it hits the backstop.

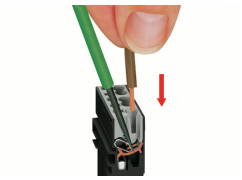

To terminate fine-stranded conductors, open the clamping unit via screwdriver (2.5 mm blade width) and insert a stripped conductor until it hits the backstop.

Conductor removal

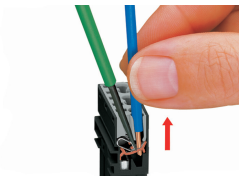

To remove the conductor, actuate the clamp via screwdriver (2.5 mm blade width) and pull out the conductor.



Seal unused cutout with lockout cap.