Data Sheet | Item Number: 789-913

Specialty electronic module; 2,50 mm²

https://www.wago.com/789-913

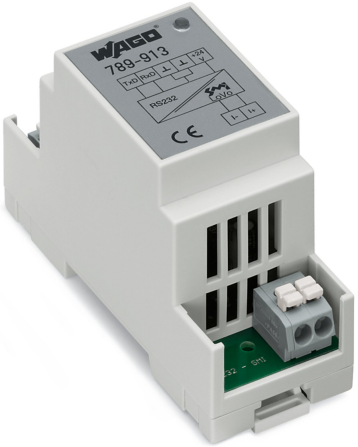

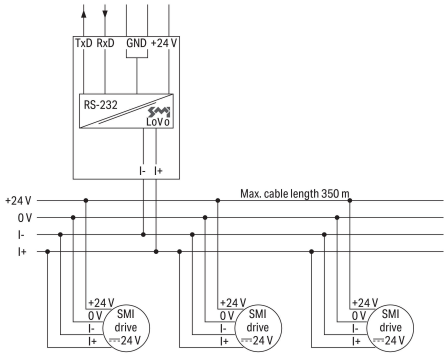

Short description:

WAGO's RS-232/SMI interface module offers a standard interface to SMI LoVo-compliant electrical drives. The interface represents a purely physical level conversion between the standard RS-232 interface and the SMI LoVo signal level. The interface module operates up to 16 SMI drives. The entire SMI range of functions can be used. The special WAGO-I/O-PRO function blocks communicate between applications and SMI LoVo drives. These function blocks support both single and group addressing, as well as status monitoring. Both 750 Series Programmable Fieldbus Controllers' RS-232 onboard interfaces and 750-650/003-000 or 753-650/003-000 Serial RS-232 Interfaces can connect to the SMI LoVo Interface Module.
The module must be supplied with an external 24 VDC power source. RS-232 and 24 V power supply are electrically isolated from the SMI LoVo connections. There is no electrical isolation between power supply and RS-232. The module is DIN-35-rail mountable.

Notes on SMI:

SMI stands for "Standard Motor Interface," a standard interface for electrical drives. SMI was developed to connect drives with integrated electronic circuitry for applications in shutters and sunshade systems.

Electrical data

Nominal operating voltage	24 VDC
Operating voltage range	±10 %
Current consumption at nominal supply voltage	≤ 55 mA (inside)
Number of SMI LoVo channels	1
Number of drives per channel	16
Status indicator	Green LED
Interface	RS-232 (interface input)
Specialty functions	SMI LoVo

Safety and protection

Protection type	IP20

Connection Data

Cable length (max.)	350 m (SMI bus; ≤ 3 m for data and power supply cable, RS-232)

Connection 1

Connection technology	CAGE CLAMP®
WAGO connector	WAGO 804 Series
Solid conductor	0.5 … 2.5 mm² / 20 … 12 AWG
Fine-stranded conductor	0.5 … 2.5 mm² / 20 … 12 AWG
Strip length	10 … 11 mm / 0.39 … 0.43 inches

Physical data

Width	35 mm / 1.378 inches
Height	90 mm / 3.543 inches
Depth from upper-edge of DIN-rail	55 mm / 2.165 inches

Mechanical data

Mounting type	DIN-35 rail
Mounting position	any
Housing design	DIN-rail-mount enclosure

Material data

Weight	80 g

Environmental requirements

Ambient temperature (operation)	0 … +50 °C
Ambient temperature (storage)	-25 … +85 °C

Standards and Specifications

Standards/specifications	EN 50090-2-2

Commercial data

Product Group	6 (INTERFACE ELECTRONIC)
PU (SPU)	1 pcs
Packaging type	Box
Country of origin	DE
GTIN	4050821101819
Customs tariff number	85389099990

Product Classification

UNSPSC	32101502
eCl@ss 10.0	27-37-12-16
eCl@ss 9.0	27-37-12-16
ETIM 9.0	EC000225
ETIM 10.0	EC000225
ECCN	NO US CLASSIFICATION

Environmental Product Compliance

RoHS Compliance Status	Compliant,No Exemption

Continued on next page

Approvals / Certificates

General approvals

Approval	Standard	Certificate Name
EAC GZO Almaty Standart	TP TC 020/2011	EAC CoC 03083

Downloads

Environmental Product Compliance

Compliance Search

Environmental Product Compliance 789-913

Documentation

Bid Text

789-913	19.02.2019	xml 5.87 KB
789-913	20.11.2014	doc 27.00 KB

CAD/CAE-Data

CAE data

EPLAN Data Portal 789-913

WSCAD Universe 789-913

1 Compatible Products

1.1 Optional Accessories

1.1.1 Ferrule

1.1.1.1 Ferrule

Item No.: 216-241
Ferrule; Sleeve for 0.5 mm² / 20 AWG; insulated; electro-tin plated; electrolytic copper; gastight crimped; acc. to DIN 46228, Part 4/09.90; white

Item No.: 216-242
Ferrule; Sleeve for 0.75 mm² / 18 AWG; insulated; electro-tin plated; electrolytic copper; gastight crimped; acc. to DIN 46228, Part 4/09.90; gray

Item No.: 216-243
Ferrule; Sleeve for 1 mm² / AWG 18; insulated; electro-tin plated; electrolytic copper; gastight crimped; acc. to DIN 46228, Part 4/09.90; red



Item No.: 216-244
Ferrule; Sleeve for 1.5 mm² / AWG 16; insulated; electro-tin plated; electrolytic copper; gastight crimped; acc. to DIN 46228, Part 4/09.90; black

Continued on next page

1.1.2 Jumper

1.1.2.1 Jumper



Item No.: 789-112
Jumper; 12-way; silver-colored

1.1.3 Marking

1.1.3.1 Marker



Item No.: 2009-145
Mini-WSB Inline; for Smart Printer; 1700 pieces on roll; stretchable 5 - 5.2 mm; plain; snap-on type; white



Item No.: 248-502
Mini-WSB marking card; as card; MARKED; 1 ... 10 (10x); not stretchable; Horizontal marking; snap-on type; white



Item No.: 248-566
Mini-WSB marking card; as card; MARKED; 1 ... 50 (2x); not stretchable; Horizontal marking; snap-on type; white



Item No.: 248-503
Mini-WSB marking card; as card; MARKED; 11 ... 20 (10x); not stretchable; Horizontal marking; snap-on type; white



Item No.: 248-504
Mini-WSB marking card; as card; MARKED; 21 ... 30 (10x); not stretchable; Horizontal marking; snap-on type; white



Item No.: 248-506
Mini-WSB marking card; as card; MARKED; 41 ... 50 (10x); not stretchable; Horizontal marking; snap-on type; white



Item No.: 248-452
Mini-WSB marking card; as card; MARKED; K (100x); not stretchable; Horizontal marking; snap-on type; white



Item No.: 248-450
Mini-WSB marking card; as card; MARKED; K1 - K10 (10x); not stretchable; Horizontal marking; snap-on type; white



Item No.: 248-451
Mini-WSB marking card; as card; MARKED; K11 - K20 (10x); not stretchable; Horizontal marking; snap-on type; white



Item No.: 248-455
Mini-WSB marking card; as card; MARKED; U 100 (10x); not stretchable; Horizontal marking; snap-on type; white



Item No.: 248-453
Mini-WSB marking card; as card; MARKED; U1, ... U10 (10x); not stretchable; Horizontal marking; snap-on type; white



Item No.: 248-454
Mini-WSB marking card; as card; MARKED; U11 - U20 (10x); not stretchable; Horizontal marking; snap-on type; white



Item No.: 248-501
Mini-WSB marking card; as card; not stretchable; plain; snap-on type; white

1.1.3.2 Marking device



Item No.: 210-110
Fiber-tip pen

1.1.4 Tool

1.1.4.1 Operating tool



Item No.: 210-720
Operating tool; Blade: 3.5 x 0.5 mm; with a partially insulated shaft; multicoloured