Data Sheet | Item Number: 855-9150/2000-1751

Rogowski coil; Primary rated current 1000 A; Output signal 22.5 mV per kA; Cable length: 1.5 m; Feedthrough for measurement conductor 175 mm

https://www.wago.com/855-9150/2000-1751

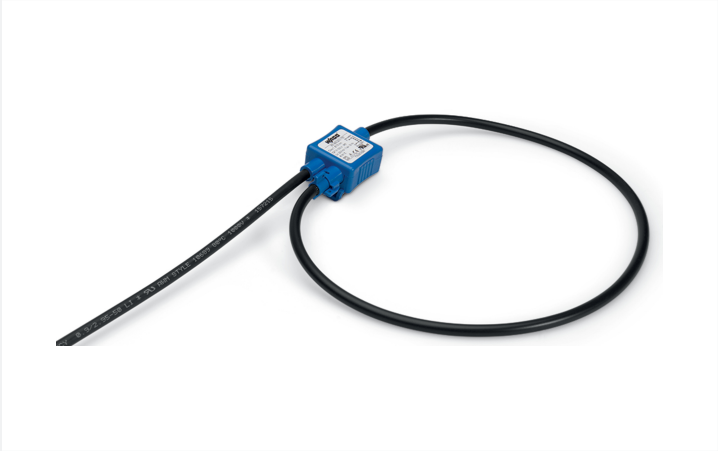

Similar to illustration

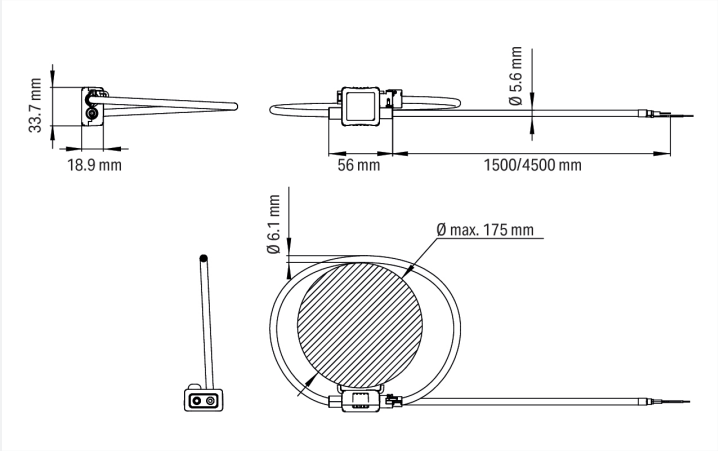

Dimensions in mm

Short description:
WAGO's Rogowski coils are used to measure AC currents and are particularly well suited for retrofitting in existing systems. The split coil bobbin allows for subsequent installation around the primary conductor – be it current bars or round conductors. These Rogowski coils can be connected to WAGO's 857-552, 750-495/000-002 and 2857-570/024-000 modules. A sealable bayonet catch and mounting brackets for cable ties make for easy installation.

Notes

Note	Rogowski technology allows the coils to measure a wide primary current range of up to 10,000 A without loss of accuracy, because there are no saturation effects. The requirements for standards EN 61869-1, EN 61869-2, EN 61869-6 and EN 61869-10 are only partially met, as there are fundamental differences with current transformers for a Rogowski coil.

Technical data

Input

Measurement range	10 … 10,000 A (up to 4000 A in combination with recommended WAGO products)
Measured variable	Current

Input – current transformer

Rated short-time thermal current I_{th}	300 kA at 50 Hz
Mutual Inductance M	72.31 nH
Rated frequency	50 … 60 Hz
Primary rated current	1000 A

Output – analog

Sensitivity	22.5 mV/kA at 50 Hz
Output signal (max.)	30 V
Internal resistance R_i	105 Ω

Signal Processing

Limit frequency	350 kHz

Measurement Error	
Accuracy class	0.5
Translation errors (all positions)	0.75 %
Translation errors (note)	Assuming the use of a primary conductor with a diameter of at least 15 mm, running perpendicular to and in contact with the coil.

Safety and protection	
Rated Voltage	1000 VAC_{rms} (Cat. III); 600 VAC_{rms} (Cat. IV)
Impulse withstand voltage (1.2/50 µs)	12.8 kV
Protection type	IP57
Voltage for isolation test	7.4 kVAC; 50 Hz; 1 min

Connection Data	
Feedthrough for measurement conductor	Ø 175 mm

Physical data	
Cable length	1.5 m

Mechanical data	
Mounting type	Split-core current transformer (suspended)

Material data	
Weight	130 g

Environmental requirements	
Ambient temperature (operation)	-40 … +80 °C
Ambient temperature (storage)	-40 … +80 °C
Relative humidity	≤ 90 % (without condensation)
Operating altitude (max.)	2000 m

Standards and Specifications	
Conformity marking	CE
Standards/specifications	EN 61010-1 EN 61010-2-32 EN 61869-1 EN 61869-2 EN 61869-6 EN 61869-10 UL 61010-1

Continued on next page

Commercial data

PU (SPU)	1 pcs
Packaging type	Bag
Country of origin	BG
Customs tariff number	90303370000

Product Classification

UNSPSC	41113637
eCl@ss 10.0	27-21-09-02
eCl@ss 9.0	27-21-09-02
ETIM 9.0	EC002048
ETIM 10.0	EC002048
ECCN	NO US CLASSIFICATION

Environmental Product Compliance

RoHS Compliance Status	Compliant,No Exemption

Approvals / Certificates

General approvals

Approval	Standard	Certificate Name
EAC GZO Almaty Standart	TP TC 004/2011	EAC CoC 03082
UL Underwriters Laboratories Inc.	UL 61010-2-032	E499682

Declarations of conformity and manufacturer's declarations

Approval	Standard	Certificate Name
EU-Declaration of Conformity WAGO GmbH & Co. KG	-	-

Downloads

Environmental Product Compliance

Compliance Search

Environmental Product Compliance 855-9150/2000-1751	

Documentation

Bid Text

855-9150/2000-1751	24.01.2019	docx 18.04 KB	
855-9150/2000-1751	24.01.2019	xml 6.04 KB	

Instruction Leaflet

Rogowski-Spulen RC70 / RC125 / RC175	V 1.1.0	pdf 1698.78 KB	

Continued on next page

1 Compatible Products

1.1 Optional Accessories

1.1.1 Signal conditioner

1.1.1.1 Current Signal Conditioner



Item No.: 857-552
Current signal conditioner; Input for Rogowski coils; Current and voltage output signal; Digital output; Configuration via software; Supply voltage: 24 VDC; 6 mm module width; 2,50 mm²

1.1.1.2 Power Measurement Module



Item No.: 2857-570/024-000
3-Phase Power Measurement Module; 3x277/480 V/RC; Modbus RTU; Digital output; Configuration via software; Supply voltage: 24 VDC

Installation Notes

Installation



Bayonet connector:
Robust and durable



Screw-mount clips:
Quick and easy mounting with cable ties



Lock-out seal:
Greater security via sealable bayonet lock