Data Sheet | Item Number: 890-102

Socket; with strain relief housing; 2-pole; Cod. A; 1,50 mm²; black

https://www.wago.com/890-102

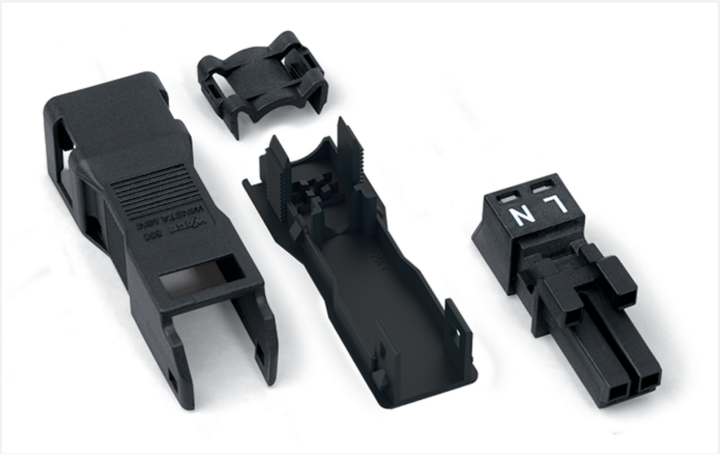

Color: ■ black

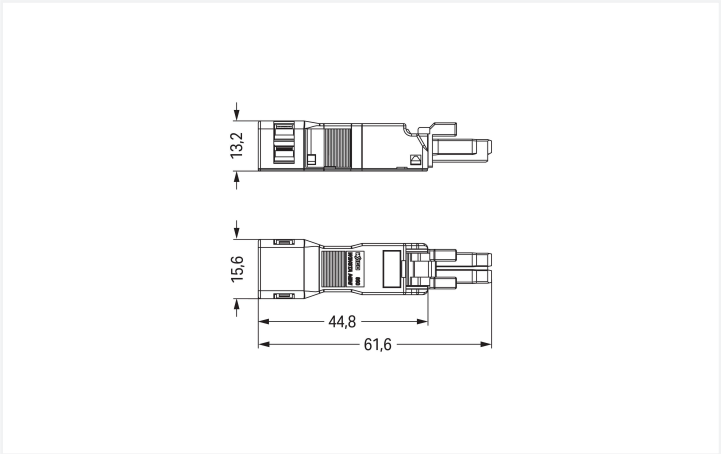

Dimensions in mm

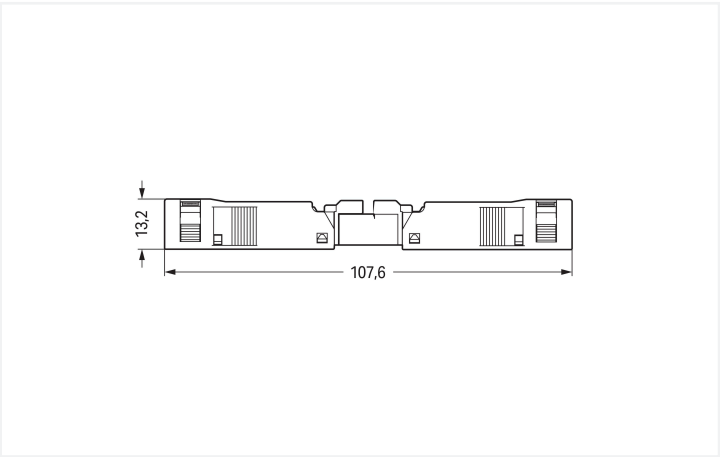

Dimensions in mm
Overall length when mated

Female connector/socket *WINSTA*® MINI with strain relief

The *WINSTA*® MINI female connector/socket rated current 16 A allows installation of solid and fine-stranded conductors. On PCBs, in control cabinets or for connecting lights – pluggable installation connectors from WAGO allow you to make connections according to various requirements in seconds. The coding options reduce installation errors, allowing fast, secure wiring of all components. The pluggable installation connector is protected against ingress by solid granular objects with a diameter of less than 1 mm in accordance with protection type IP40. General mains applications for almost any domain of use can be implemented with *WINSTA*® MINI pluggable installation connectors with A coding. Especially if only limited space is available, our smallest pluggable connection system, *WINSTA*® MINI, consistently displays its advantages. It is very compact, and, with Push-in CAGE CLAMP® spring pressure connection technology, it additionally can be installed quickly, since the connection is low-maintenance and requires no screw connections. A range up to 32 mm can be used for the strip length.

Push-in CAGE CLAMP® spring pressure connection technology – pluggable installation instead of laborious screw connections!

WINSTA® is the pluggable connection system that is ideally tailored to the strict requirements of electrical installation. It offers error-free installation of cables and components, quickly and reliably. Now you can also cut installation costs without compromising quality and safety: with marking reduces the need for servicing and prevents unnecessary downtime.

- effective protection against mismating
- consistent IP40 protection
- for any mains application
- custom-engineered solutions
- quick replacement of defective units during ongoing operation

This item includes:



Item No.: 890-202 — 1

Socket; 2-pole; Cod. A; 1,50 mm²; black



Item No.: 890-502 — 1

Strain relief housing; 2-pole; with locking clip; for 1 cable; 3.8 … 8.2 mm; 30 mm; black

Notes

General safety information	1. Only to be used by a qualified electrician or by a person electrically instructed for the task (EIP per DIN VDE 0105-100). 2. Do not install while energized or under load. 3. Use only for its intended purpose. 4. Observe applicable national regulations, standards and directives. 5. Observe the technical specifications of the products. 6. Ensure correct polarity assignment. 7. Do not use damaged or contaminated components. 8. Observe conductor types, conductor cross-sections, strip lengths and cable diameters. 9. Insert conductors up to the stop. 10. Use only with locking lever and strain relief. 11. Use original accessories only. **To be sold only with installation instructions!**

Electrical data

Ratings per	IEC/EN 60664-1		
Overvoltage category	III	III	II
Pollution degree	3	2	2
Nominal voltage	250 V	-	-
Rated impulse withstand voltage	4 kV	-	-
Rated current	16 A	-	-

Approvals per	UL 1977
Rated voltage	600 V
Rated current	14 A

General information

Note on contact resistance	approx. 1 mΩ of contact resistance approx. 0.25 mΩ contact transition plug/ socket

Connection Data

Clamping units	2
Total number of potentials	2

Connection 1

Connection technology	Push-in CAGE CLAMP®
Actuation type	Operating tool Push-in
Nominal cross-section	1.5 mm² / 16 AWG
Solid conductor	0.25 … 1.5 mm² / 22 … 16 AWG
Solid conductor; push-in termination	0.75 … 1.5 mm² / 20 … 16 AWG
Stranded conductor	0.25 … 1 mm² / 22 … 18 AWG
Fine-stranded conductor	0.25 … 1.5 mm² / 22 … 16 AWG
Fine-stranded conductor; with insulated ferrule	0.25 … 0.75 mm² / 22 … 20 AWG
Fine-stranded conductor; with uninsulated ferrule	0.25 … 0.75 mm² / 22 … 20 AWG
Fine-stranded conductor; with ferrule; push-in termination	0.75 mm² / 20 AWG
Strip length	9 mm / 0.35 inches
Pole number	2
Connectable sheathed cable diameter	3.8 … 8.2 mm
Conductor entry direction to mating direction	0 °
Strip length (outer insulation)	32 mm
Coding	A

Continued on next page

Physical data

Pin spacing	4.4 mm / 0.173 inches
Width	15.6 mm / 0.614 inches
Height	13.2 mm / 0.52 inches
Depth	61.6 mm / 2.425 inches

Mechanical data

Use	General mains applications
Variable coding	No
Marking	L N
Potential marking	L N
Mating force of a plug-in connection	approx. 20 … 70 N (depending on pole number)
Retention force of a plug-in connection	Locked: > 80 N
Unmating force of a plug-in connection	Unlocked: approx. 20 … 70 N (depending on pole number)
Number of mating cycles	200, without resistive load
Protection type	IP40

Plug-in connection

Contact type (pluggable connector)	Female connector/socket
Connector (connection type)	for conductor
Mismating protection	Yes
Note on mismating protection	All *WINSTA*® components are 100% protected against mismating when: a.) plugging different numbers of poles b.) plugging while rotated 180 c.) plugging while laterally staggered d.) plugging one pole
Locking lever	Can be retrofitted
Locking of plug-in connection	Locking lever
Note on locking system	All connectors for mounted installations (snap-in versions for lighting fixtures or devices, all types of PCB and distribution connectors) are factory-equipped with locking levers to ensure plugs and sockets are securely locked. Additional locking levers are only required for flying leads (plug/socket).
Strain relief	Strain relief housing

Material data

Note (material data)	Information on material specifications can be found here
Color	black
Cover color	gray
Material group	I
Insulation material (main housing)	Polyamide (PA66)
Flammability class per UL94	V0
Clamping spring material	Chrome-nickel spring steel (CrNi)
Contact material	Copper or copper alloy; surface-treated
Contact Plating	Tin
Fire load	0.131 MJ
Connector color	black
Strain relief color	black
Weight	5.7 g

Continued on next page

Environmental requirements

Processing temperature	-5 … +40 °C
Continuous operating temperature	-35 … +85 °C
Note on continuous operating temperature	Insulating parts for temperatures ≤ 105 °C

Commercial data

Product Group	20 (Winsta)
PU (SPU)	50 pcs
Packaging type	Box
Country of origin	DE
GTIN	4045454231729
Customs tariff number	85366990990

Product Classification

UNSPSC	39121402
eCl@ss 10.0	27-44-06-05
eCl@ss 9.0	27-44-06-05
ETIM 9.0	EC002560
ETIM 10.0	EC002560
ECCN	NO US CLASSIFICATION

Environmental Product Compliance

RoHS Compliance Status	Compliant,No Exemption

Approvals / Certificates

General approvals

Approval	Standard	Certificate Name
CCA DEKRA Certification B.V.	EN 61535	71-123231
CCA DEKRA Certification B.V.	IEC 61535	NL-85020
cURus Underwriters Laboratories Inc.	UL 1977	E45171

Declarations of conformity and manufacturer's declarations

Approval	Standard	Certificate Name
EU-Declaration of Conformity WAGO GmbH & Co. KG	-	-
UK-Declaration of Conformity WAGO GmbH & Co. KG	-	-

Approvals for marine applications

Approval	Standard	Certificate Name
ABS American Bureau of Shipping	Steel Vessel Rules	24-0095973-PDA
DNV GL Det Norske Veritas, Germanischer Lloyd	-	TAE00001Z6
LR Lloyds Register	EN 61535	LR23317167TA
PRS Polski Rejestr Statków	-	TE/1096/880590/23

Continued on next page

Downloads

Environmental Product Compliance

Compliance Search

Environmental Product Compliance 890-102

Documentation

Bid Text

890-102	08.06.2015	doc 23.00 KB
890-102	19.02.2019	xml 3.03 KB

CAD/CAE-Data

CAD data

2D/3D Models 890-102

CAE data

EPLAN Data Portal 890-102

WSCAD Universe 890-102

ZUKEN Portal 890-102

1 Compatible Products

1.1 System counterpart

1.1.1 Cable assembly

Item No.: 891-8992/205-101
pre-assembled connecting cable; Eca; Plug/ open-ended; 2-pole; Cod. A; H05VV-F 2 x 1.0 mm²; 1 m; 1,00 mm²; black

Item No.: 891-8992/005-101
pre-assembled interconnecting cable; Eca; Socket/plug; 2-pole; Cod. A; H05VV-F 2 x 1.0 mm²; 1 m; 1,00 mm²; black

1.1.2 Distribution connector



Item No.: 890-1634
h-distribution connector; 2-pole; Cod. A; 1 input; 2 outputs; outputs on one side; 2 locking levers; black



Item No.: 890-1636
h-distribution connector; 2-pole; Cod. A; 1 input; 2 outputs; outputs on one side; 3 locking levers; for flying leads; black



Item No.: 890-1606
T-distribution connector; 2-pole; Cod. A; 1 input; 2 outputs; 2 locking levers; black



Item No.: 890-1615
T-distribution connector; 2-pole; Cod. A; 1 input; 2 outputs; 3 locking levers; for flying leads; black

 Continued on next page

1.1.3 Male connector/plug



Item No.: 890-812/011-000
Plug for PCBs; angled; 2-pole; Cod. A; black



Item No.: 890-812
Plug for PCBs; straight; 2-pole; Cod. A; black



Item No.: 890-212
Plug; 2-pole; Cod. A; 1,50 mm²; black



Item No.: 890-112
Plug; with strain relief housing; 2-pole; 1,50 mm²; black



Item No.: 890-212/342-000
Plug; with strain relief housing; 2-pole; Cod. A; 1,50 mm²; black



Item No.: 890-712
Snap-in plug; 2-pole; Cod. A; 1,50 mm²; black

1.2 Required Accessories

1.2.1 Locking system

1.2.1.1 Locking system



Item No.: 890-111
Locking lever; for flying leads; for tool operation; black



Item No.: 890-131
Locking lever; for flying leads; for tool operation; white



Item No.: 890-101
Locking lever; for manual operation; black



Item No.: 890-121
Locking lever; for manual operation; white

1.3 Optional Accessories

1.3.1 Cover

1.3.1.1 Cover



Item No.: 897-2001
Protective cap; Type1; for sockets and plugs; PVC; red

1.3.2 Installation

1.3.2.1 Mounting accessories



Item No.: 890-310
Mounting carrier; 2- to 5-pole; for flying leads; black



Item No.: 890-311
Mounting carrier; 2- to 5-pole; for flying leads; white

1.3.3 Tool

1.3.3.1 Operating tool



Item No.: 890-382
Operating tool; 2-way; green



Item No.: 210-719
Operating tool; Blade: 2.5 x 0.4 mm; with a partially insulated shaft

Continued on next page

Installation Notes

Conductor termination

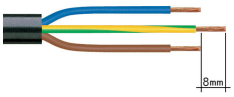

1. Strip length, outer insulation = 30 mm (2-pole), 37 mm (3-pole), 45 mm (4- and 5-pole)
2. Strip length = 9 mm
3. Extended ground conductor = 8 mm

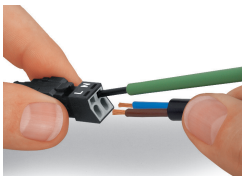

To terminate fine-stranded conductors, open the clamping unit via screwdriver – 2.5 mm blade width – and insert a stripped conductor until it hits the backstop.
Terminate solid conductors by simply pushing them in.

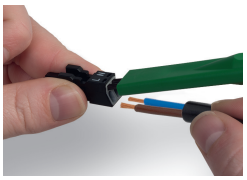

To terminate fine-stranded conductors, open clamping units via operating tool (890-382) and insert stripped conductors until they hit backstop.
Terminate solid conductors by simply pushing them in.

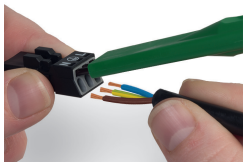

To terminate fine-stranded conductors, open clamping units via operating tool (890-383) and insert stripped conductors until they hit backstop.
Terminate solid conductors by simply pushing them in.

Installation

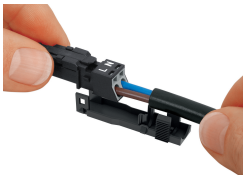

Latch the wired connector into the base of the strain relief housing.



Push down strain relief clamp by hand.



Push down strain relief clamp with 2.5 mm screwdriver alternately on both sides.

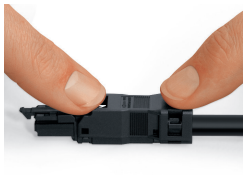

Latch the top of the strain relief housing.



The printed marking of the connector is clearly visible in the openings of the strain relief housing.