# SOLO Plus

## Centrifugal Bathroom/Toilet Fan

Installation and Wiring Instructions

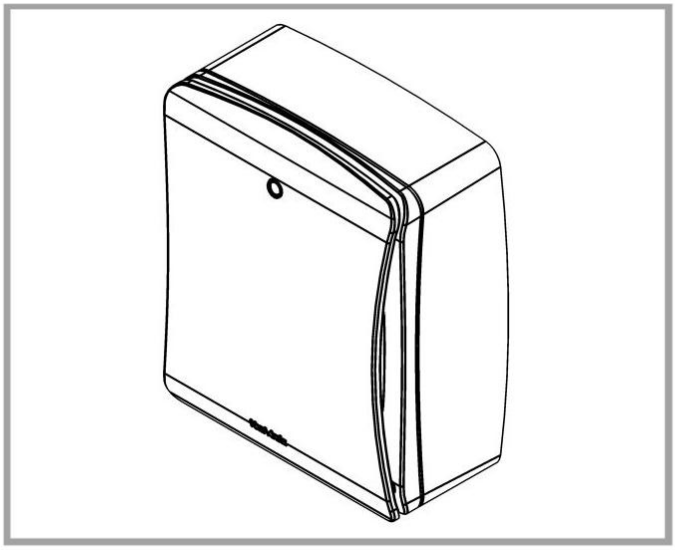

**Stock Ref. N°**

**427477B (P)**
**427478C (T)**
**427479C (HT)**
**427480B (TM)**

**220-240V~50Hz**

Vent-Axia®

**PLEASE READ INSTRUCTIONS IN CONJUNCTION WITH THE ILLUSTRATIONS.**
**PLEASE SAVE THESE INSTRUCTIONS**

T IPX4

CE
UK
CA

**Installation and Wiring Instructions for the SOLO Plus Bathroom Extract Fan.**

**IMPORTANT:**
**READ THESE INSTRUCTIONS BEFORE COMMENCING THE INSTALLATION**

DO NOT install this product in areas where the following may be present or occur:

- Excessive oil or a grease laden atmosphere.
- Corrosive or flammable gases, liquids, or vapours.
- Ambient temperatures higher than 40°C or less than –5°C.
- Possible obstructions which would hinder the access or removal of the Fan.

## SAFETY AND GUIDANCE NOTES

**A.** All wiring to be in accordance with the current I.E.T. Regulations, or the appropriate standards of your country and **MUST** be installed by a suitably qualified person.
**B.** The Fan should be provided with a local isolator switch capable of disconnecting all poles, having a contact separation of at least 3mm.
**C.** Ensure that the mains supply (Voltage, Frequency, and Phase) complies with the rating label.
**D.** The Fan should only be used in conjunction with the appropriate Vent-Axia products.
**E.** It is recommended that the connection to the fan connector terminals is made with flexible cable.
**F.** When the Fan is used to remove air from a room containing a fuel-burning appliance, ensure that the air replacement is adequate for both the fan and the fuel-burning appliance.
**G.** The Fan should not be used where it is liable to be subject to direct water spray for prolonged periods of time.
**H.** Where ducted Fans are used to handle moisture-laden air, a condensation trap should be fitted. Horizontal ducts should be arranged to slope slightly downwards away from the Fan.
**I.** This appliance is not intended for use by persons (Including children) with reduced physical, sensory, or mental capabilities, or lack of experience and knowledge, unless they have been given supervision or instruction concerning use of the appliance by a person responsible for their safety.
**J.** Young children should be supervised to ensure that they do not play with the appliance.
**K.** Fans used for tropical climates.

**DESCRIPTION**

As standard, the SOLO Plus is suitable for panel/wall installations, flush or surface mounting, either in a horizontal or vertical plane. 100mm ducting (flexible or straight) can be attached using the supplied adjustable spigot, providing rear or side exit options. Adaptors for System 25 and System 50 ducting can be used in conjunction with the adjustable spigot. For wall installations a Wall Kit (25 41 02 White / 25 41 00 Brown) can be used. An optional filter is also available (449265). Please see our catalogue or web site (www.vent-axia.com) for more information on System 25/50 and for alternative ducting and termination options.

## A. INSTALLATION

### PANEL MOUNTING (Surface)

1. Cut a 105mm∅ hole through the panel, ensuring that there is sufficient space for the product to be installed and that the filter can be removed for maintenance.
2. Removing the grille. Firstly, remove the front cover by carefully pulling each corner of the front panel until it is free to be removed from the inner grille (Fig 1). Unscrew the two screws at the bottom of the inner grille. The screws will remain in the inner grille but will be loose when the grille is ready to be removed (Fig 1). Lift the inner grille from the bottom edge ensuring not to damage the sensor cable (TM model only) attached to the front assembly and Base Housing (Fig 6).

3. Remove the Spigot Ring from inside the carton and clip over the Spigot Adaptor making sure the lip on the Spigot Ring locates firmly inside the groove on the Spigot Adaptor (Fig 2). Ensure that the Spigot Adaptor is firmly located onto the Base Housing and the shutter is still securely fastened and fully functional.
4. Set-up the appropriate speed selection and other features as outlined in **Section B SETUP.**
5. Attach the ducting to the Spigot and locate into the hole in the panel ensuring the Skirt is located correctly into the Base Housing. Secure into position using appropriate fixtures (Fig 3).
6. Ensure the Impeller rotates freely.
7. Select and follow the appropriate wiring diagram in **Section C WIRING.**
8. Replace the inner grille ensuring that the PIR sensor cable (TM model only) is reconnected to the PIR sensor PCB (Fig 6). Replace the front panel.
9. Switch the mains power supply on and check the fan is operating correctly.

## PANEL MOUNTING (Flush)

1. Mark and cut a rectangular hole (190mm x 240mm) through the panel, ensuring that there is sufficient space for the product to be installed and that the filter (if fitted) can be removed for maintenance. IMPORTANT: Be careful to avoid joists and hidden cables.
2. Removing the grille. Firstly, remove the front cover by carefully pulling each corner of the front panel until it is free to be removed from the inner grille (Fig 1). Unscrew the two screws at the bottom of the inner grille. The screws will remain in the inner grille but will be loose when the grille is ready to be removed (Fig 1). Lift the inner grille from the bottom edge ensuring not to damage the sensor cable (TM model only) attached to the front assembly and Base Housing (Fig 6).
3. Remove the Spigot Ring from inside the carton and clip over the Spigot Adaptor, making sure the lip on the Spigot Ring locates firmly inside the groove on the Spigot Adaptor (Fig 2). The Spigot can be repositioned for side exit installations by removing the screw and sliding the spigot away from the rear of the Base Housing, carefully observing the guide rails (Fig 4). The Spigot can then be rotated and repositioned for side exit using the same guide rails and retaining screw (Fig 4). Ensure that the Spigot Adaptor is firmly located onto the Base Housing in the required orientation and the shutter is still securely fastened and fully functional.
4. Remove the Skirt and pass the supplied screw fully through the flange of the base housing. Then attach the 3 supplied Panel Clips (Fig 5). and partially screw into place until they are properly retained (allowing enough gap for the panel thickness).
5. Set-up the appropriate speed selection and other features as outlined in **Section B SETUP.**
6. Attach the ducting to the Spigot and locate into the hole in the panel, ensuring the cable is fed into the Base Housing and the Panel Clips spring out behind the panel.
7. Secure into position by carefully tightening the Panel Clips. It may be necessary to hold the product centrally in the hole while tightening so that no gaps are seen once the cover is on. **IMPORTANT: If power tools are used, set them to the minimum torque setting or preferably use a manual screwdriver. Do not over tighten.**
8. Ensure the Impeller rotates freely.
9. Select and follow the appropriate wiring diagram in **Section C WIRING.**
10. Replace the inner grille ensuring that the PIR sensor cable (TM model only) is reconnected to the PIR sensor PCB (Fig 6). Replace the front panel.
11. Switch the mains power supply on and check the fan is operating correctly.

## WALL MOUNTING (Surface)

For wall installations a Wall Kit (25 41 02 White / 25 41 00 Brown) can be used.

1. Cut a 115mm. ∅ hole through the wall, ensuring that there is sufficient space for the product to be installed and that the filter (If fitted) can be removed for maintenance.
2. Insert the wall sleeve with the smaller diameter sleeve on the room-side and cement both ends into position flush with the wall faces. The wall sleeve should be angled downwards, away from the fan, to allow any condensation to drain to the outside wall.
3. Outside Grille: Using the Back Plate as a template, mark the fixing hole centres on the wall. Drill and plug the wall and fix the Back Plate into position.
4. Fix the Outside Grille on to the Back Plate (screws provided). Ensure the louvres are pointing downwards.
5. Removing the grille. Firstly, remove the front cover by carefully pulling each corner of the front panel until it is free to be removed from the inner grille (Fig 1). Unscrew the two screws at the bottom of the inner grille. The screws will remain in the inner grille but will be loose when the grille is ready to be removed (Fig1). Lift the inner grille from the bottom edge ensuring not to damage the sensor cable (TM model only) attached to the front assembly and Base Housing (Fig 6).
6. Remove the Spigot Ring from inside the carton and clip over the Spigot Adaptor making sure the lip on the Spigot Ring locates firmly inside the groove on the Spigot Adaptor (Fig 2). Ensure that the Spigot Adaptor is firmly located onto the Base Housing and the shutter is still securely fastened and fully functional.
7. Set-up the appropriate speed selection and other features as outlined in **Section B SETUP.**
8. Using the Base Housing as a template, mark the fixing hole centres on the wall, carefully sliding the spigot into the Wall Liner. Secure the Base Housing into position using the screws and fixings provided ensuring the Skirt is located correctly into the Base Housing (Fig 3).
9. Ensure the Impeller rotates freely.
10. Select and follow the appropriate wiring diagram in **Section C WIRING.**

12. Replace the inner grille ensuring that the PIR sensor cable (TM model only) is reconnected to the PIR sensor PCB (Fig 6). Replace the front panel.
13. Switch the mains power supply on and check the fan is operating correctly.

## B. SETUP

**WARNING: THE FAN AND ANCILLARY CONTROL EQUIPMENT MUST BE ISOLATED FROM THE POWER SUPPLY DURING THE INSTALLATION / OR MAINTENANCE.**

**1. 427480B TM model only SELECTING THE CONSTANT TRICKLE (with Boost) OPTION.**
**IMPORTANT: Constant Trickle with Boost option not available on P model. Please see note below.**
Link terminals 4 and 5 together for constant trickle with boost facility (Fig 8).

**2. 427480B TM model only SELECTING THE BOOST SPEED.**
This will determine the speed at which the fan will run when activated.

i. Link terminals 2 and 3 (Fig 8) for Normal boost speed.
ii. Link terminals 1 and 3 (Fig 8) for High boost speed.
**IMPORTANT: Do not link across terminals 1 and 2.**

The **SOLO Plus P 427477B** models do not have the ability to switch from 'constant trickle' to Normal or High speed Boost. The fan can switch from Off to either Trickle, Normal or High speed (Fig 9). For **Constant** Trickle, Normal or High speed (with no boost option), switch the Pull-cord (P model only) into the **On** position and cut the string.

**3. 427480B TM model only TIMER ADJUSTMENT**
The overrun time period is factory set to 15 minutes. The overrun time period may be adjusted from 5-30 minutes by altering the adjuster on the control PCB.

i. To REDUCE the operating time, turn the adjuster [T] (Fig 7) ANTI-CLOCKWISE.
ii. To INCREASE the operating time, turn the adjuster [T] (Fig 7) CLOCKWISE.

**4. For T & HT Models refer to** (Fig 10)
**427478C –** Timer* - Fixed 15min. timer. Continuous fan with variable speed options.
**427479C –** Humidity Timer* - Humidity controlled with override pullcord and fixed 15min. timer overrun. Continuous running fan with variable speed options.
***timer versions require a third switch live wire for the timer to work.**

## C. WIRING.

**WARNING: THE FAN AND ANCILLARY CONTROL EQUIPMENT MUST BE ISOLATED FROM THE POWER SUPPLY DURING THE INSTALLATION / OR MAINTENANCE.**

1. Select and follow the appropriate wiring diagram (Fig 11-12).
2. It may be necessary to feed the mains cable around between the outside of the Base Housing and the Skirt to prevent the cable from being trapped.
3. Check all connections have been made correctly and ensure all terminal connections and cable clamps are securely fastened.
4. Ensure the impeller rotates and is free from obstructions.

## D. SERVICING AND MAINTENANCE.

**WARNING: THE FAN AND ANCILLARY CONTROL EQUIPMENT MUST BE ISOLATED FROM THE POWER SUPPLY DURING MAINTENANCE.**

1. At intervals appropriate to the installation, the fan should be inspected and if required cleaned to ensure there is no build-up of dirt or other deposits.

2. If a filter is fitted, remove the filter and wash in warm soapy water.
3. Wipe the inlets and front face with a damp cloth until clean.
4. Once the filter is dry it can be replaced.
   **The fan has sealed for life bearings, which do not require lubrication.**

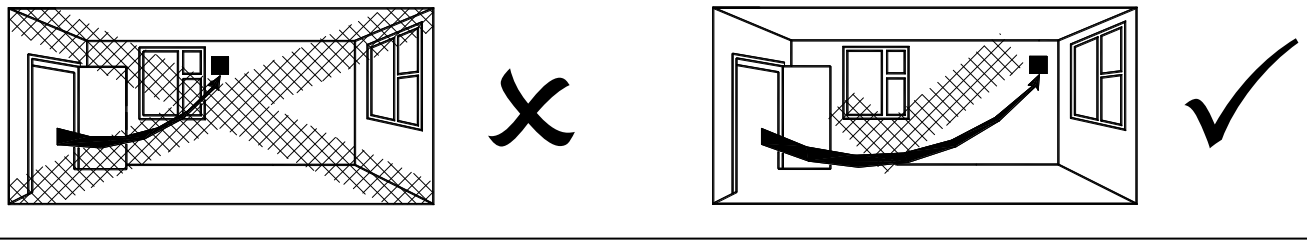

Fig. 1.
Removing the grille

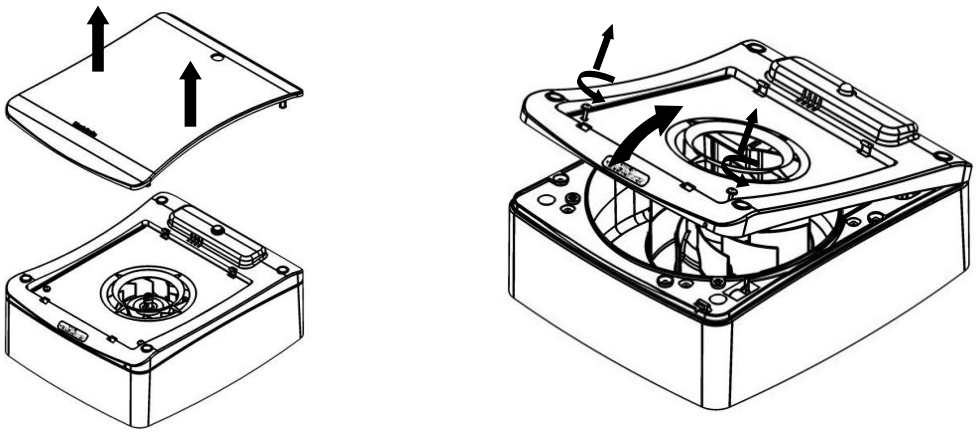

Fig. 2.
Attaching the
Spigot.

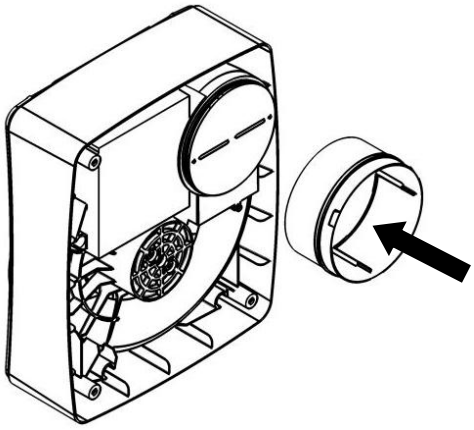

Fig. 3.
Surface mounting
screw hole locations

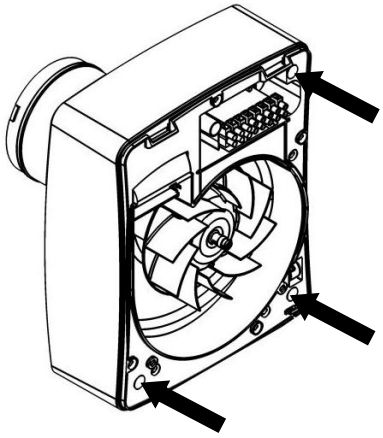

Fig. 4.
Converting outlet
spigot for side exit
and recess mounting.

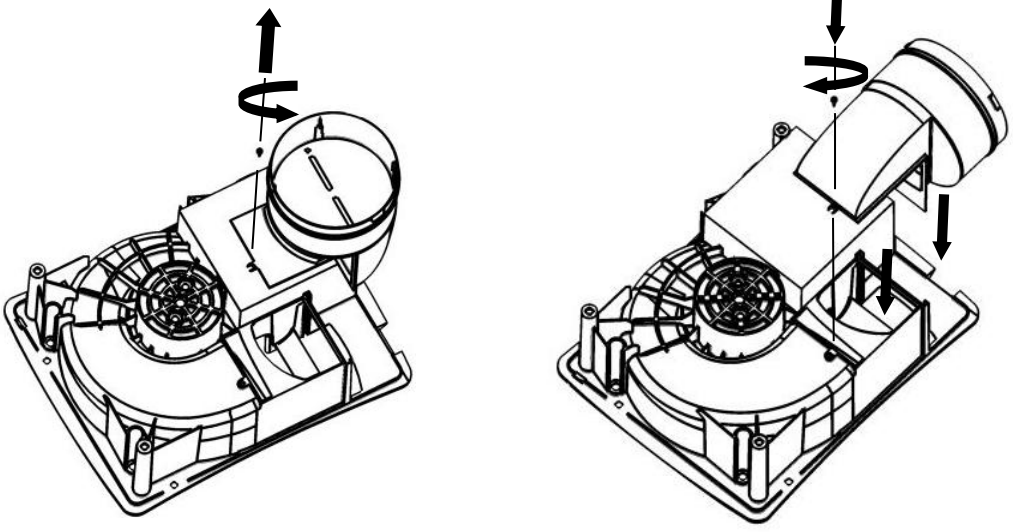

Fig. 5.
Recess mounting clips
In 3 positions

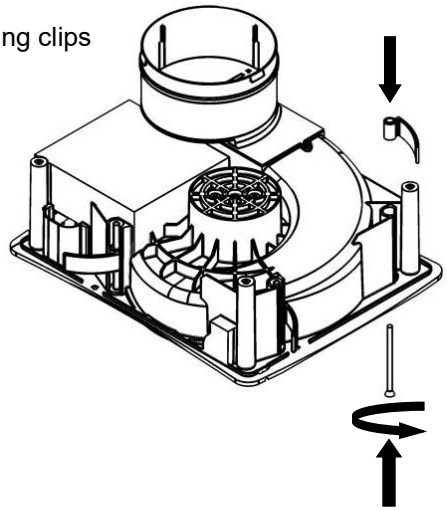

Fig. 6. PIR sensor cable - **(TM only)**

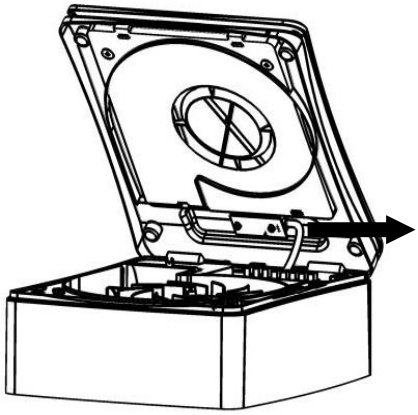

To remove the cover on TM models the sensor lead must be disconnected

Fig. 7. Settings **427477B P** & **427480B TM** models only

Top view of PCB cover showing pot locations jumper location and terminal location

LED position
(Not on **P** model)

Timer adjuster
**(TM Models)**
To reduce time
Turn anti-clockwise.

To increase time
Turn Clockwise.

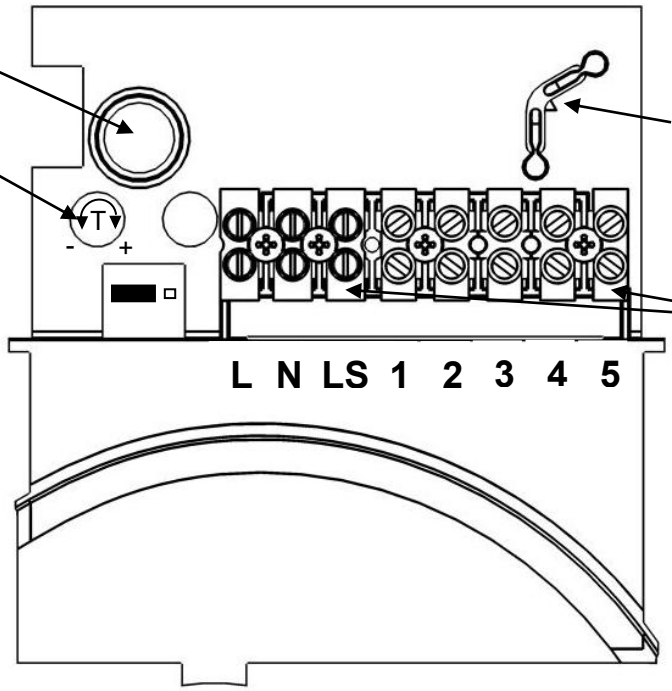


Cable clamp must be used with surface wiring.

Note:-
On **P** models **LS** and **5** are omitted.
On **TM** models **LS** is Omitted.

Fig. 8. Settings – **427480B TM** model
**IMPORTANT: Do not link across terminals 1 and 2**

Link terminals 2 and 3 for Normal boost speed.

Normal speed boost

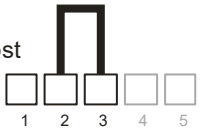


Link terminals 1 and 3 for High boost speed.

High speed boost

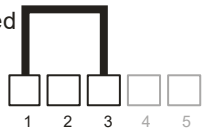


**Additional** Link terminals 4 and 5 together for constant trickle with boost facility

To enable constant trickle mode

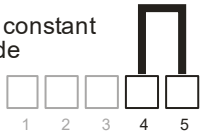


Fig. 9. Settings – **427477B P** model

The **SOLO Plus P** models do not have the ability to switch from 'constant trickle' to Normal or High speed Boost. The fan can switch from Off to either Trickle, Normal or High speed. For **Constant** Trickle, Normal or High speed (with no boost option), switch the Pull-cord (P model only) into the **On** position and cut the string.

Low speed

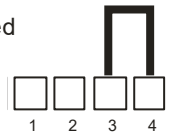


Medium speed

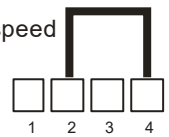


High speed

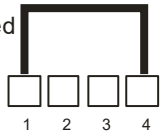

Fig. 10. Settings **427478C T** & **427479C HT** models only

Top view of PCB cover showing pot location jumper location and terminal location

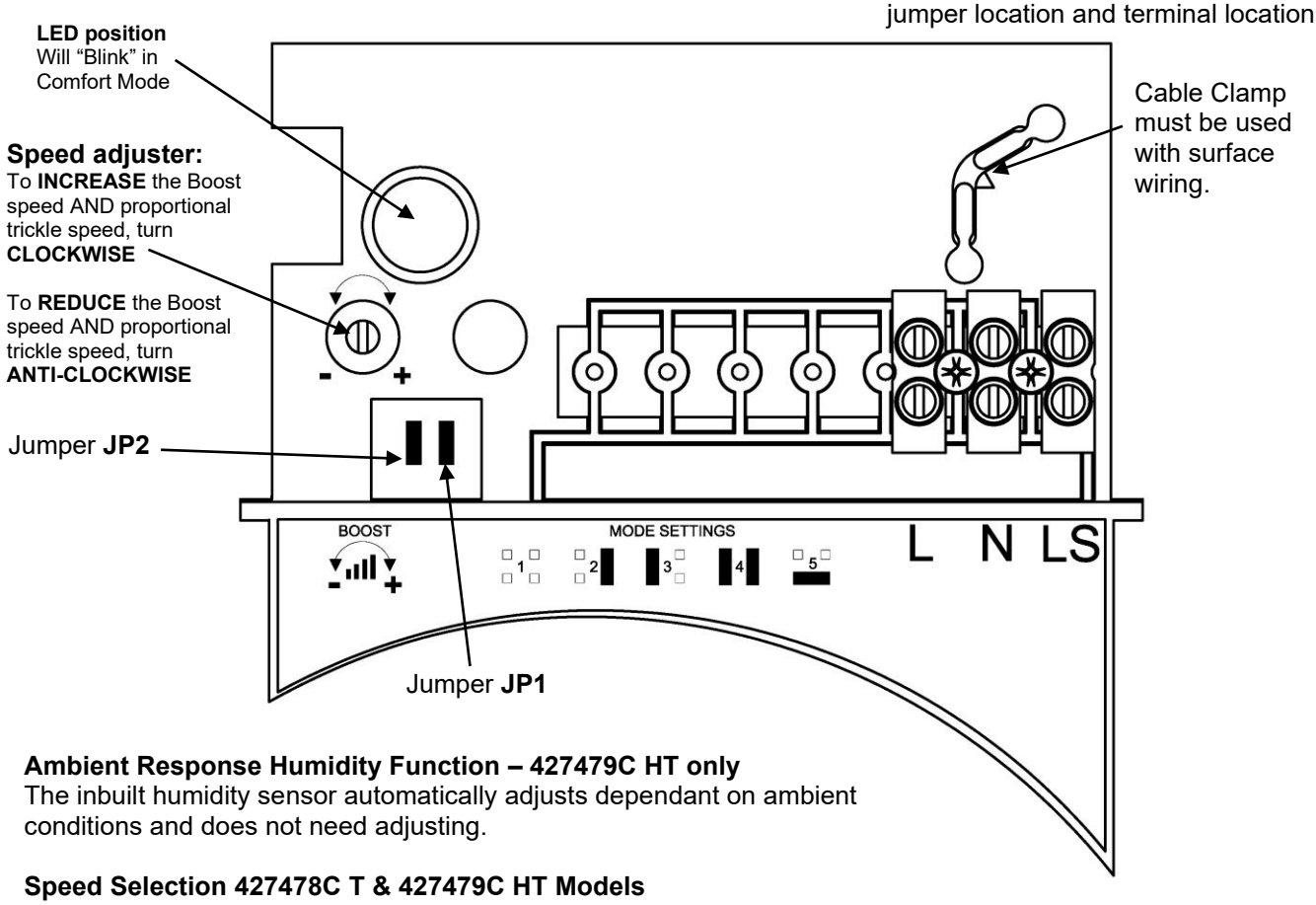


**Ambient Response Humidity Function – 427479C HT only**
The inbuilt humidity sensor automatically adjusts dependant on ambient conditions and does not need adjusting.

**Speed Selection 427478C T & 427479C HT Models**
Adjust the fan speed by turning the pot clockwise to increase, and anti-clockwise to decrease. If continuous running mode is selected, the trickle speed is approximately 50% of the chosen high speed.

**Comfort mode (Mode 5) – 427478C T & 427479C HT Models**
Mode 5 should be selected to enable comfort mode. (default Mode 4). This feature delays the LS input boost operation for a maximum of 20 minutes to reduce noise and cold drafts while bathing. After the LS is disconnected, the fan will switch on for the same period the LS had been active (up to 20 minutes), plus the overrun time period (15 minutes).The Fan LED will "Blink" when LS is on and comfort mode is enabled.

**LED Status (Mode 5) – 427478C T & 427479C HT Models**

| **Modes** | Fan Off | Trickle speed | Boost speed | RH boost | Comfort mode |
|---|---|---|---|---|---|
| **LED Status** | No LED | No LED | Solid LED | No LED | Slow Blink LED |

**Timer Function (Mode 2,4 or 5) 427478C T & 427479C HT Models**
See below table for jumper positions and fan functions.

| MODE | JUMPER | TIMER | COMFORT MODE | CONTINUOUS TRICKLE |
|---|---|---|---|---|
| 1 | NONE | NO | NO | NO |
| 2 | JP1 ONLY | YES | NO | NO |
| 3 | JP2 ONLY | NO | NO | YES |
| 4 | BOTH | YES | NO | YES |
| 5 | JP1/JP2 CROSSED | YES | YES | YES |

| MODE | FAN FUNCTIONS |
|---|---|
| 1 | INTERMITTANT FAN WITHOUT TIMER |
| 2 | INTERMITTANT FAN WITH TIMER |
| 3 | CONTINUOUS RUNNING FAN WITHOUT TIMER |
| 4 | CONTINUOUS RUNNING FAN WITH TIMER |
| 5 | CONTINUOUS RUNNING FAN WITH TIMER & COMFORT MODE |

Fig. 11. P/TM wiring diagram

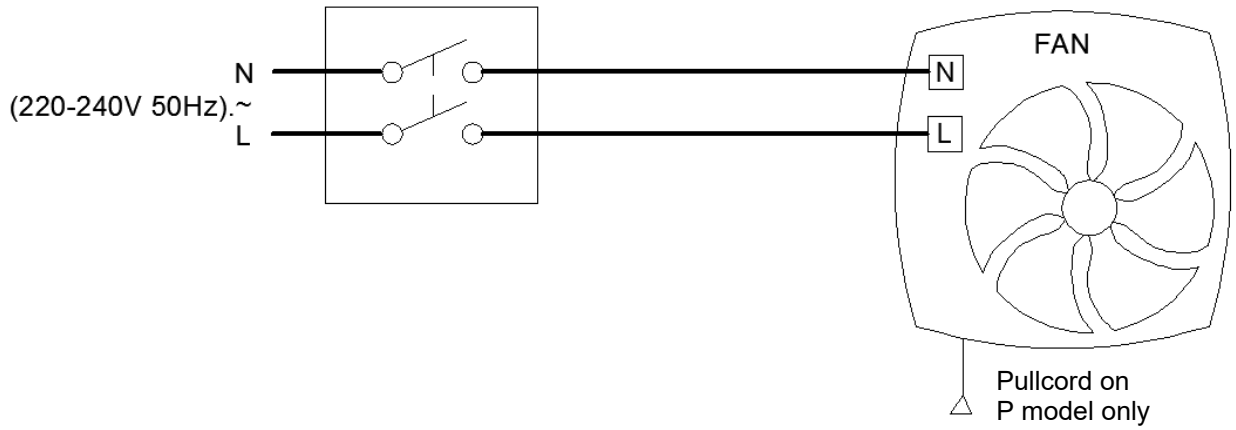


**Pull-cord functions with the Comfort mode (Mode 5) enabled or disabled:**

- The boost speed can be triggered either using the pull-cord or through the LS switch (once LS signal has been provided to the unit).

**<u>Comfort mode disabled</u>:** Pull-cord switches the fan from trickle or off to boost.

**<u>Comfort mode enabled</u>:**

- If LS is activated < 3mins: no boost.
- If LS is activated for 3 to 20 minutes: boost commences when LS is de-activated, for the period LS was active for + any overrun period configured.
- If LS is activated for >20 minutes: boost commences after LS has been active for 20 minutes and shall remain active for a further 20 minutes + overrun, after LS is de-activated.

- Pull-cord may override the LS comfort mode (Mode 5 in Fig.10), boosting the fan immediately. It detects change to act as boost override trigger until switch is removed.
- An activation when a PC/LS boost is already active shall cancel overrun timer, if timer is enabled (proportional (RH) boost sources remain unaffected).
- <u>Overrun Timer mode disabled</u>: Fan will go into off/ in trickle mode immediately after LS is disconnected.
- <u>Overrun Timer mode enabled</u>: Fan will stay in boost for 15 minutes after LS is disconnected before returning into off / trickle mode.

Fig. 12. T/HT wiring diagram

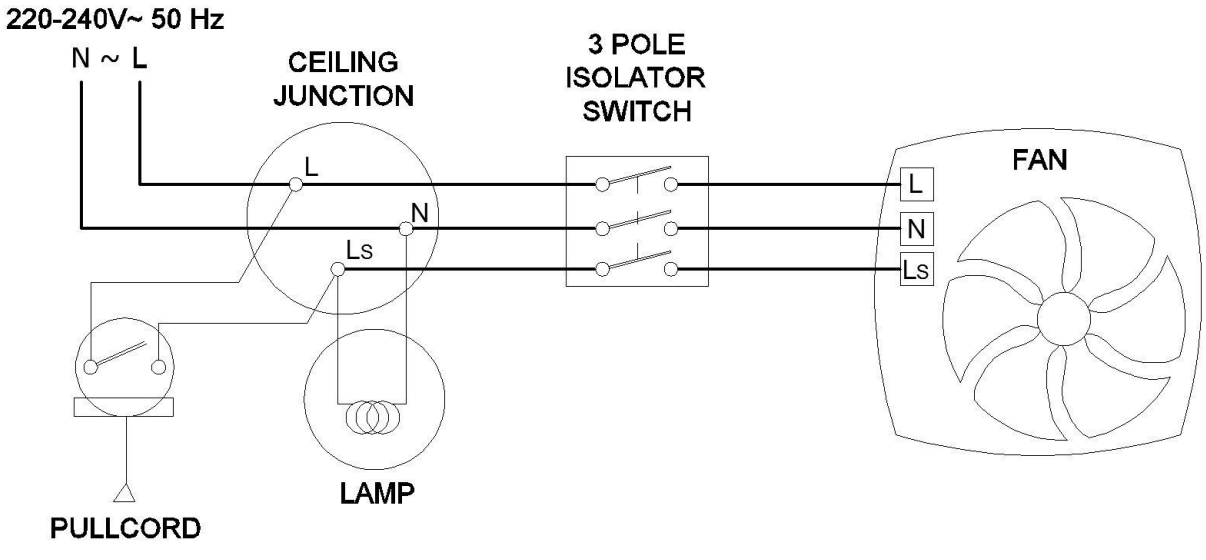

**PRODUCT FICHE**

For Residential Ventilation Units (Complying Commission Delegated Regulation (EU) No 1254/2014)

| Name: | Vent-Axia | Vent-Axia | Vent-Axia | Vent-Axia |
|---|---|---|---|---|
| Model ID (Stock Ref.) : | Solo Plus P - 427477 | Solo Plus T - 427478 | Solo Plus HT - 427479 | Solo Plus TM - 427480 |
| SEC Class | F | F | E | E |
| SEC Value ('Average') | 13.97 | 15.72 | 26.23 | 26.23 |
| SEC Value ('Warm') | 6.32 | 7.11 | 11.86 | 11.86 |
| SEC Value ('Cold') | 27.32 | 30.75 | 51.31 | 51.31 |
| Label Required? (Yes/No=Out of scope) | No | No | No | No |
| Declared as: RVU or NRVU/UVU or BVU | RVU-UVU | RVU-UVU | RVU-UVU | RVU-UVU |
| Speed Drive | Multi-Speed | Multi-Speed | Multi-Speed | Multi-Speed |
| Type HRS (Recuperative, Regenerative, None) | None | None | None | None |
| Thermal Eff: [ (%), NA(if none)] | N/A | N/A | N/A | N/A |
| Max. Flow Rate (m3/h) | 61.20 | 61.20 | 61.20 | 61.20 |
| Max. Power Input (W): (@Max.Flow Rate) | 17.10 | 17.10 | 17.10 | 17.10 |
| LWA: Sound Power Level (dB) | 52.02 | 52.02 | 52.02 | 52.02 |
| Ref. Flow Rate (m3/s) | 0.01 | 0.01 | 0.01 | 0.01 |
| Ref. Pressure Diff. (Pa) | N/A | N/A | N/A | N/A |
| SPI [W/(m3/h)] | 0.40 | 0.40 | 0.40 | 0.40 |
| Control Factor & Control Typology: (CTRL/ Typology) | | | | |
| Control Factor; CTRL | 1.00 | 0.95 | 0.65 | 0.65 |
| Control Typology | Manual Control | Clock Control | Local Demand Control | Local Demand Control |
| Declared: -Max Internal & External Leakage Rates(%) for BVUs or carry over (for regenerative heat exchangers only), -&Ext. Leakage Rates (%) for Ducted UVUs; | N/A | N/A | N/A | N/A |
| Mixing Rate of Non-Ducted BVUs not intended to be equipped with one duct connection on either supply or extract air side; | N/A | N/A | N/A | N/A |
| Position and description of visual filter warning for RVUs intended for use with filters, including text pointing out the importance of regular filter changes for performance and energy efficiency of the unit | N/A | N/A | N/A | N/A |
| For UVUs (Instructions Install Regulated Supply/Extract Grilles Façade) | In F&W | In F&W | In F&W | In F&W |
| Internet Address (for Disassembly Instructions) | www.vent-axia.com | www.vent-axia.com | www.vent-axia.com | www.vent-axia.com |
| Sensitivity p. Variation@+20/-20 Pa: (for Non-Ducted Vus) | N/A | N/A | N/A | N/A |
| Air Tightness-ID/OD-(m3/h) (for Non-Ducted Vus) | N/A | N/A | N/A | N/A |
| Annual Electricity Consumption: AEC (kWh/a) | 5.50 | 5.09 | 2.88 | 2.88 |
| Annual Heating Saved: AHS (kWh/a) | | | | |
| AHS: Average | 13.97 | 15.72 | 26.23 | 26.23 |
| AHS: Warm | 6.32 | 7.11 | 11.86 | 11.86 |
| AHS: Cold | 27.32 | 30.75 | 51.31 | 51.31 |

## The Vent-Axia® Guarantee

Applicable only to products installed and used in the United Kingdom. For details of guarantee outside the United Kingdom contact your local supplier.

Vent-Axia guarantees its products for two years from date of purchase against faulty material or workmanship. In the event of any part being found to be defective, the product will be repaired, or at the Company's option replaced, without charge, provided that the product:-

- Has been installed and used in accordance with the instructions given with each unit.
- Has not been connected to an unsuitable electricity supply. (The correct electricity supply voltage is shown on the product rating label attached to the unit).
- Has not been subjected to misuse, neglect or damage.
- Has not been modified or repaired by any person not authorised by the company.

**IF CLAIMING UNDER TERMS OF GUARANTEE**

Please return the complete product, carriage paid to your original supplier or nearest Vent-Axia Centre, by post or personal visit. Please ensure that it is adequately packed and accompanied by a letter clearly marked "Guarantee Claim" stating the nature of the fault and providing evidence of date and source of purchase.

The guarantee is offered to you as an extra benefit, and does not effect your legal rights

Vent-Axia®

Head Office: Fleming Way, Crawley, West Sussex, RH10 9YX.

*UK NATIONAL CALL CENTRE,* ***Newton Road, Crawley, West Sussex, RH10 9JA***
SALES ENQUIRIES: Tel: 0344 8560590
TECHNICAL SUPPORT: Tel: 0344 8560595

For details of the warranty and returns procedure please refer to www.vent-axia.com or write to Vent-Axia Ltd, Fleming Way, Crawley, RH10 9YX
EU Authorised Representative: Vent-Axia Sigarenmaker 5 - 5521DJ Eersel Nederland authorisedrep@vent-axia.nl

412660 B 0726