MANROSE®

Installation and Wiring Instructions

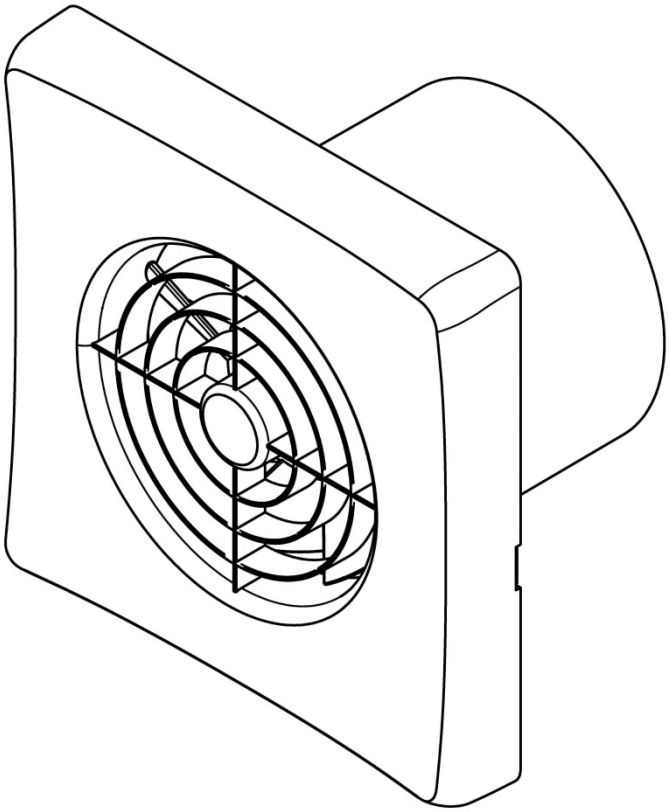

Quiet Fan Range

QF100SX5OP	**Manrose Quiet Fan X5 S**
QF100TX5OP	**Manrose Quiet Fan X5 T**
QF100HTX5OP	**Manrose Quiet Fan X5 HT**
QF100PIRX5OP	**Manrose Quiet Fan X5 PIR**

PLEASE READ THESE INSTRUCTIONS IN CONJUNCTION WITH THE ILLUSTRATIONS.
PLEASE SAVE THESE INSTRUCTIONS.

IPX5 UK CA CE

Installation and Wiring Instructions for the Quiet Fan Range



IMPORTANT: READ THESE INSTRUCTIONS BEFORE COMMENCING THE INSTALLATION

DO NOT install this product in areas where the following may be present or occur:

- Excessive oil or a grease laden atmosphere.
- Corrosive or flammable gases, liquids or vapours.
- Ambient temperatures higher than 40°C or less than –5°C.
- Possible obstructions which would hinder the access or removal of the Fan.

SAFETY AND GUIDANCE NOTES

A. All wiring to be in accordance with the current I.E.T. Regulations, or the appropriate standards of your country and **MUST** be installed by a suitably qualified person.

B. The Fan is suitable for installation within Zones 1 & 2.

C. The Fan should be provided with a local isolator switch capable of disconnecting all poles, having a contact separation of at least 3mm.

D. Ensure that the mains supply (Voltage, Frequency, and Phase) complies with the rating label.

E. The Fan should only be used in conjunction with the appropriate Manrose products.

F. The Fan should only be used in conjunction with fixed wiring.

G. When the Fan is used to remove air from a room containing a fuel-burning appliance, ensure that the air replacement is adequate for both the fan and the fuel-burning appliance.

H. The Fan should not be used where it is liable to be subject to direct water spray for prolonged periods of time.

I. Where ducted Fans are used to handle moisture-laden air, a condensation trap should be fitted. Horizontal ducts should be arranged to slope slightly downwards away from the Fan.

J. This appliance is not intended for use by persons (including children) with reduced physical, sensory or mental capabilities, or lack of experience and knowledge, unless they have been given supervision or instruction concerning use of the appliance by a person responsible for their safety.

K. Children should be supervised to ensure that they do not play with the appliance.

L. Stationary appliances not fitted with means for disconnection from the supply mains having a contact separation in all poles that provide full disconnection under over voltage category III, the instructions state that means for disconnection must be incorporated in the fixed wiring in accordance with the wiring rules.

M. Ensure the grille is fully engaged onto the fan chassis using all clips.

N. Cleaning and user maintenance shall not be made by children.

ACCESSORIES (not supplied)

WALL FITTING KIT

A range of 100mm wall kits are available for installing into most walls using liners supplied.

INSTALLATION



IMPORTANT: The fan should only be used in conjunction with fixed wiring.

PANEL MOUNTING

1. For panel mounting the fan should be installed into a closed duct protected by an exterior air grille that must comply with the standard requirements of your country.
2. Cut a 105mm diameter hole for 100mm fans.
3. Push the two clips on each side of the fan and pull the grille away from the chassis.
4. Mark the screw centres through the holes in the fan back plate. Drill, plug and screw into position.
5. After installation, ensure impeller rotates freely and the shutters can open.
6. Replace the grille and ensure the clips reactivate.

WALL MOUNTING

1. For wall mounting either cut a 115mm diameter hole for 100mm fans, through the wall and insert the wall sleeve. Slope the sleeve slightly downwards away from the fan. Cut to length and cement both ends into position flush with the wall faces.
2. Push the two clips on each side of the fan and pull the grille away from the chassis.
3. Mark the screw centres through the holes in the fan back plate. Drill, plug and screw into position. Fix exterior grille into position with the louvres positioned downwards. (Note:- The grille must comply with the standard requirements of your country. The wall kit used in this installation should provide a minimum ducting length of 100mm from the fans back plate to the inside of the external grille).
4. After installation, ensure impeller rotates freely and the shutters can open.
5. Replace the grille and ensure the clips reactivate.

WIRING

WARNING: THE FAN AND ANCILLARY CONTROL EQUIPMENT MUST BE ISOLATED FROM THE POWER SUPPLY DURING THE INSTALLATION / OR MAINTENANCE.

IMPORTANT

- The fan should only be used in conjunction with fixed wiring.
- The cross - sectional area of supply cord used should be ranged from 0.75-1.5mm^2.
- Cable entry can be made from the rear or the side of the fan using the grommet provided.
- The extraction fan is suitable for connection to 220-240V ~ 50Hz supply.
- The fan is a class ll double insulated product and **MUST NOT** be earthed.

1. Select and follow the appropriate wiring diagram. (Fig. 1, 2 or 3)
2. Check all connections have been made correctly and ensure all terminal connections are securely fastened.
3. Ensure the impeller rotates and is free from obstructions.

SETUP

WARNING: THE FAN AND ANCILLARY CONTROL EQUIPMENT MUST BE ISOLATED FROM THE POWER SUPPLY DURING THE INSTALLATION / OR MAINTENANCE.

See Fig 1, 2, 3, 4, 5, 6 & 7

QF100SX5OP – Single speed fan. Controlled by remote switch (e.g light switch or auto sensor) Fig.1.

QF100TX5OP – Single speed fan with overrun Timer* - The fan can be wired to a lighting circuit switch. Fig.3. or wired for a basic on/off operation wire as Fig 2.

When switched ‘ON’, the fan will operate at full speed and will continue to run for a pre-set time after the switch is turned ‘OFF’ Overrun timer adjustable 5-30min. See Fig.6.

QF100HTX5OP - Single speed fan with Humidity Timer* - The fan contains an integral humidity sensor. In automatic mode the fan switches on when the room Relative Humidity (RH) increases. The fan will continue to run until the room RH falls. These fans also include a built in overrun timer function that is adjustable between 5-30 min. See Fig.7.

QF100PIRX5OP - PIR* - Single speed with PIR (passive infra-red) detector and overrun timer. The fan starts automatically when a movement is detected and will continue to operate for the set overrun time period. Fig. 1.

The fan can also be wired to a lighting circuit switch. Fig.3. so it can be started by the light switch or the PIR detector. For timer adjustment see Fig.5.

***All timer versions require a third switch live wire for the timer to work.**

WARNING: THE FAN AND ANCILLARY CONTROL EQUIPMENT MUST BE ISOLATED FROM THE POWER SUPPLY DURING MAINTENANCE.

1. At intervals appropriate to the installation, the fan should be inspected and cleaned to ensure there is no build-up of dirt or other deposits.
2. Wipe the inlets and front face with a damp cloth until clean.

The fan has sealed for life bearings, which do not require lubrication.

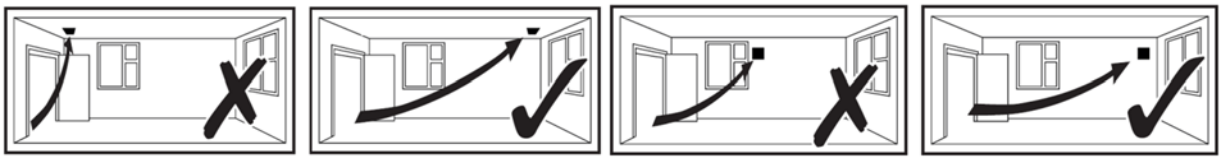

Fig.1: QF100SX5OP & QF100PIRX5OP

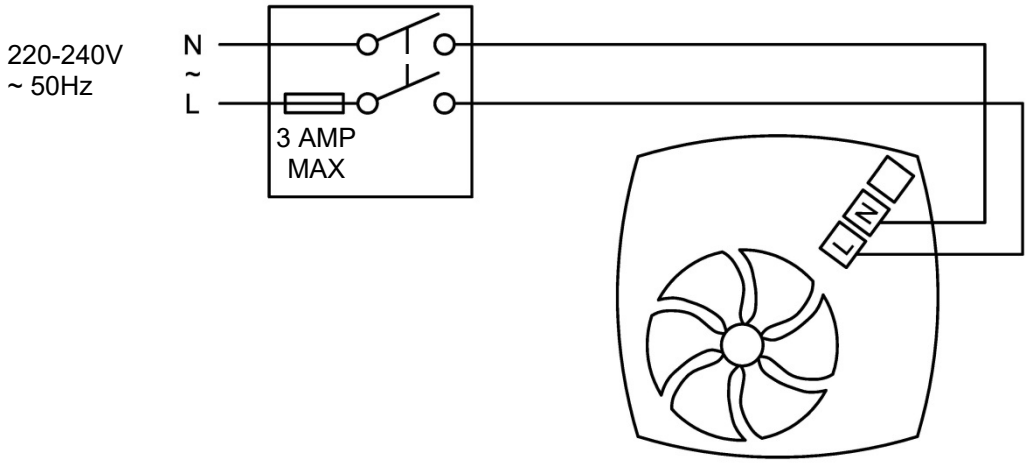

Fig.2: QF100TX5OP & QF100HTX5OP (Timer / Humidistat disabled)

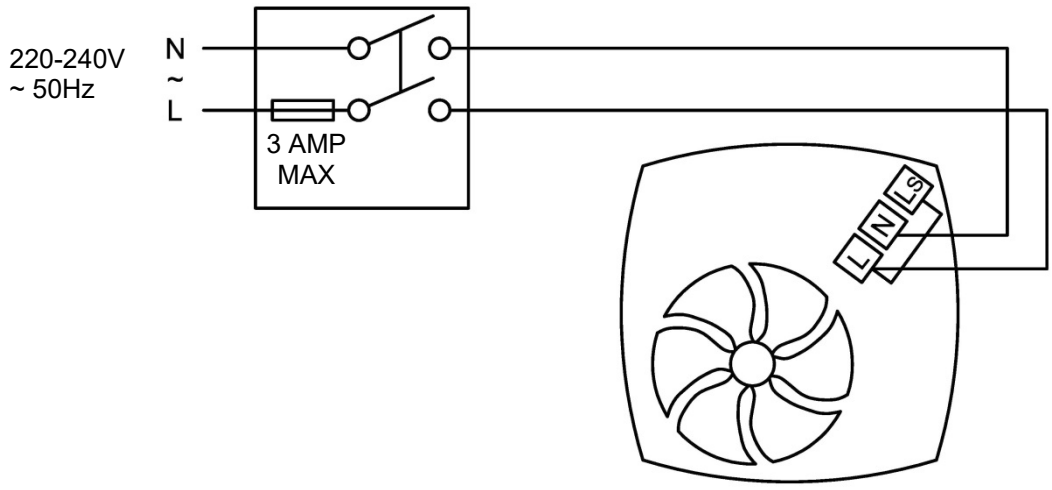

Fig.3: QF100TX5OP, QF100HTX5OP & QF100PIRX5OP

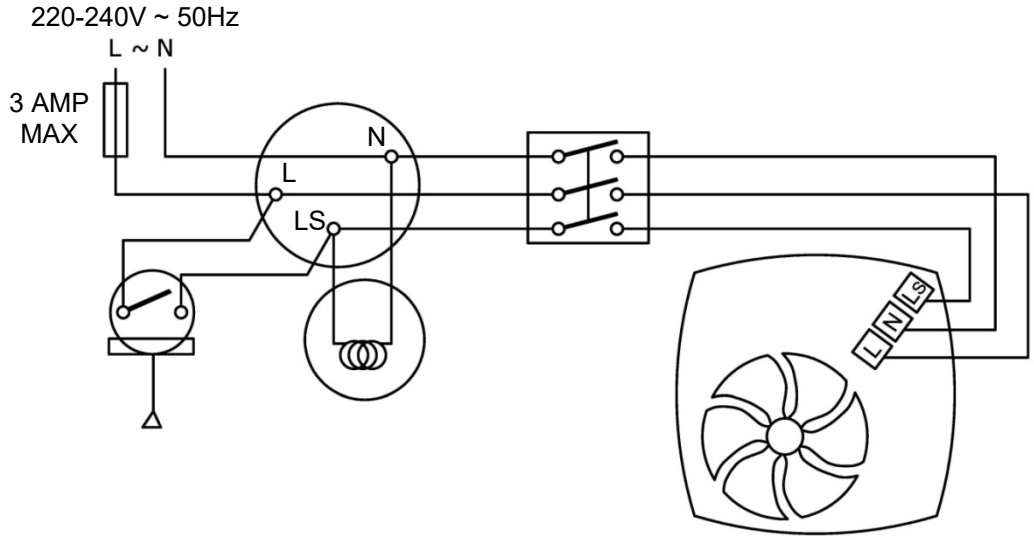

Fig.4: – Grille removal for cable entry and PCB control access.

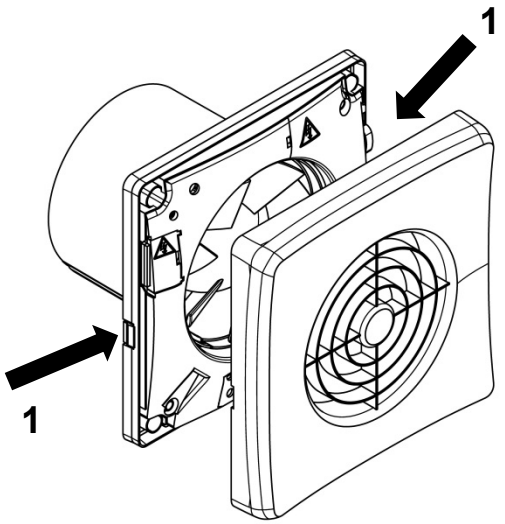

To remove the grille, push both clips on each side (**1**)

Fig. 5: **PIR TIMER**

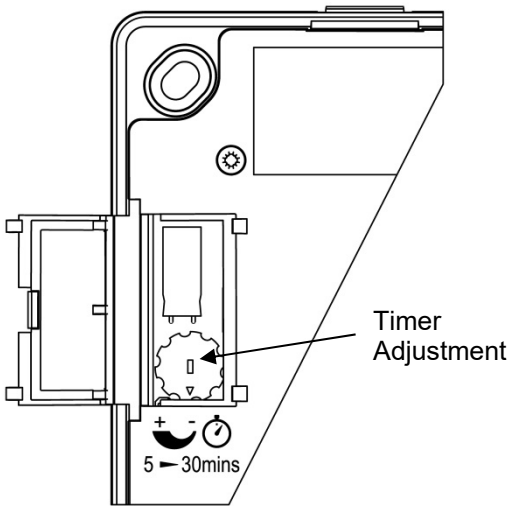

Timer Adjustment
To **REDUCE** the operating time, use a small screwdriver to turn the adjuster **ANTI-CLOCKWISE.**

To **INCREASE** the operating time, use a small screwdriver to turn the adjuster **CLOCKWISE.**

Fig.6: QF100TX5OP

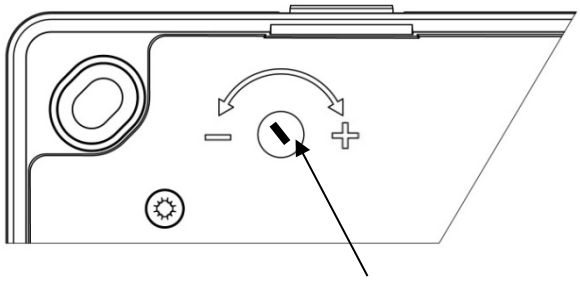

Timer Adjustment:
To **REDUCE** the operating time, use a small screwdriver to turn the adjuster **ANTI-CLOCKWISE.**

To **INCREASE** the operating time, use a small screwdriver to turn the adjuster **CLOCKWISE.**

Fig.7: QF100HTX5OP

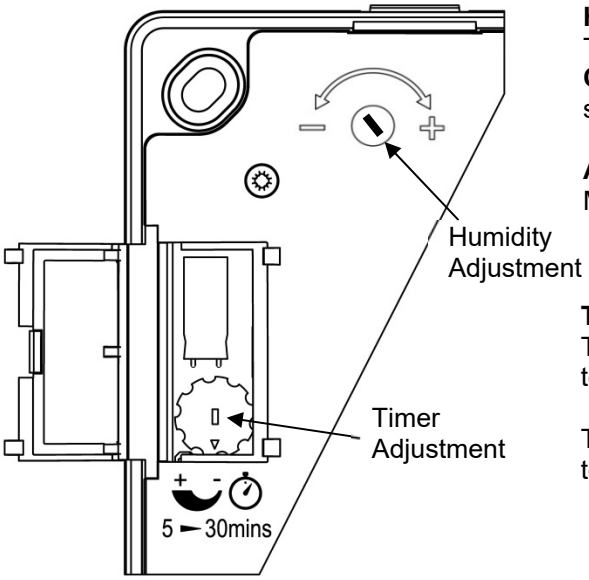

Humidity Adjustment
To **INCREASE SET POINT**, turn the adjuster **CLOCKWISE**. This makes the controller LESS sensitive.
To **REDUCE SET POINT**, turn the adjuster **ANTI-CLOCKWISE**. This makes the controller MORE sensitive.

Timer Adjustment
To **REDUCE** the operating time, use a small screwdriver to turn the adjuster **ANTI-CLOCKWISE.**

To **INCREASE** the operating time, use a small screwdriver to turn the adjuster **CLOCKWISE.**



Disposal
This product should not be disposed of with household waste. Please recycle where facilities exist. Check with your local authority for recycling advice.

.

Manrose Manufacturing
Unit 23, 53 Suttons Park Avenue
Earley
Reading
RG6 1AZ

Contact Information
Website: www.manrose.co.uk
email: sales@manrose.com
Sales hotline: 01753 691399
Technical hotline: 01753 876941

EU Authorised Representative: Manrose Sigarenmaker 5 - 5521DJ Eersel Nederland authorisedrep@manrose.nl

496934 B 0323